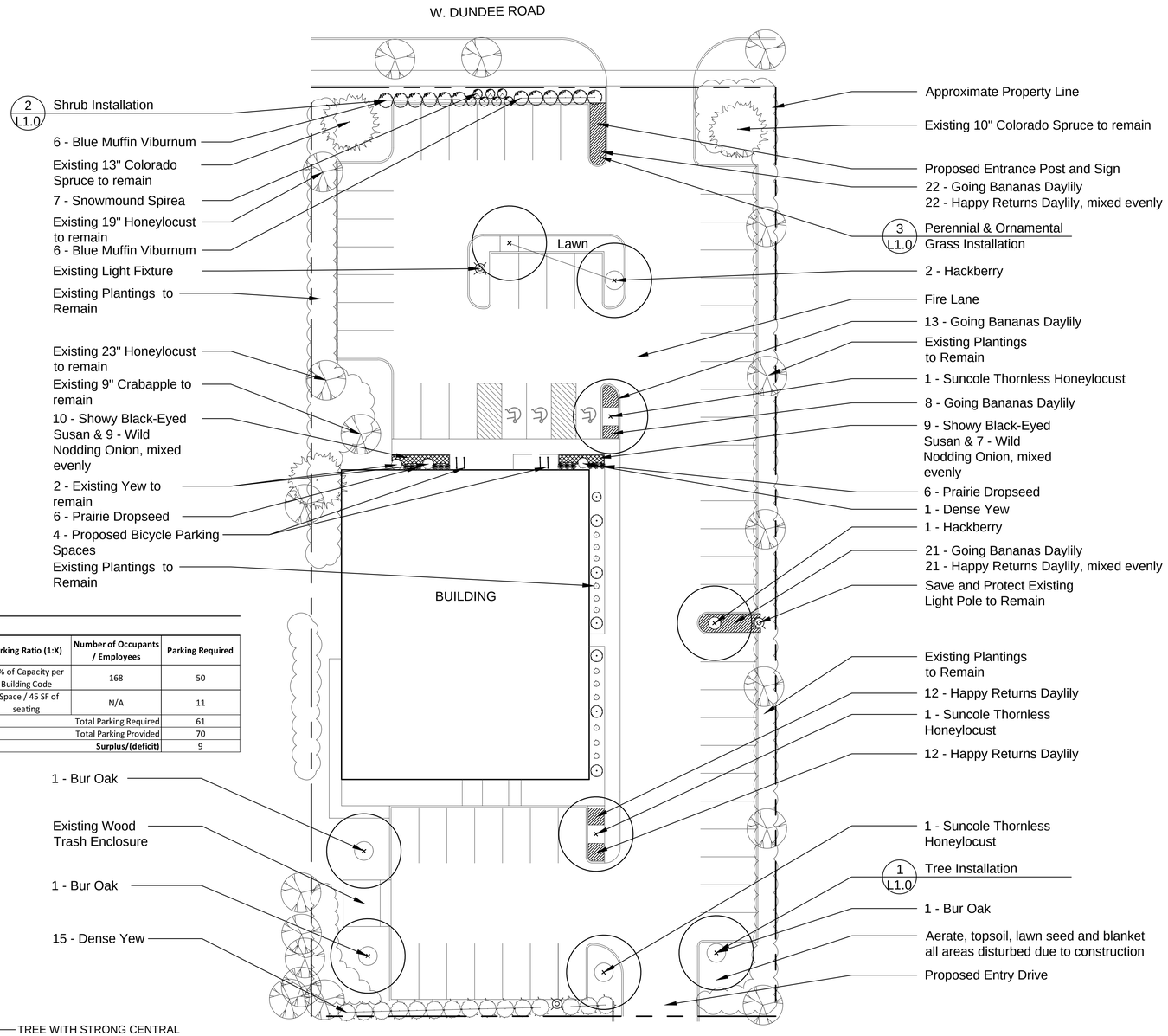

REQUIRED PARKING CHART

Required Parking

Space	Code Uses	Gross Square Footage	Parking Ratio (1:X)	Number of Occupants / Employees	Parking Required
Mini Golf/Arcade	Amusement	7,900	30% of Capacity per Building Code	168	50
Dining Area	Dining Area	500	1 Space / 45 SF of seating	N/A	11
				Total Parking Required	61
				Total Parking Provided	70
				Surplus/(deficit)	9

GENERAL NOTES: LANDSCAPE

1. Notes indicated on grading plans shall pertain to landscape plans. Final grade of planting beds shall be as per grading plan.
2. The landscape contractor shall be responsible for making themselves familiar with all underground utilities and structures.
3. All existing plant material and trees shall be saved and protected unless otherwise noted. Contractor to protect new and existing trees and landscaping from damage and shall restore all areas disturbed as a result of construction.
4. Plant material shall be supplied from Northern Illinois nursery stock, shall be dug the planting season it is installed, and shall conform to the American Association of Nurseryman's standards.
5. Plant material shall be size and type specified. Substitution of plant material shall be on a case by case basis and approved in writing by the Owner's Representative. In no case shall plant material be smaller than indicated in the plans.
6. Do not willfully proceed with plantings as designed when it is obvious that obstructions and/or grade differences exist that may not have been known during the design process. Such conditions shall be immediately brought to the attention of the Owner's Representative.
7. All plant material shall be inspected and approved by the Owner's Representative prior to the installation of any and all plant material.
8. Plant locations shall be flagged in field with Owner's Rep. Final location of all plant material shall be subject to approval of the Owner's Representative prior to digging any holes. The landscape contractor is responsible for providing Owner's Representative with 48 hour minimum advance notice prior to planting.
9. Plants shall be watered on the day they are planted and maintained with watering until final acceptance of the project.
10. Apply a pre-emergent as per manufacturer's specification prior to installing mulch.
11. Beds and tree rings (6' diameter) shall have 3" of hardwood shredded mulch applied and a 4" deep spade edge at lawn. Trees that are not located in beds, shall have a tree ring.
12. Landscape plant material shall be guaranteed for 12 months from final acceptance. Any plant 1/3 dead or more shall be replaced under the guarantee.
13. Contractor to prepare landscape beds by roto-tilling 2" of Mushroom Compost into new beds. Do not add compost nor roto-till within drip line of existing trees.
14. Lawn Seeding shall be under favorable weather conditions, and shall follow dates in specification.
15. Turf mixes shall be installed and lawn established at all disturbed areas.
16. Do not overseed into mulch beds and paving.
17. Contractor shall restore all areas disturbed as a result of construction.

LEGEND

- Shade Tree
- Existing Shade Tree
- Shrub
- Existing Evergreen Tree
- Perennial and Groundcover (hatch symbol varies)
- Existing Plantings

PLANT LIST

QTY	SIZE	BOTANICAL NAME	COMMON NAME
Shade Trees - Balled and Burlap			
3	4" cal.	Celtis occidentalis 'Chicagoland'	Hackberry
3	4" cal.	Gleditsia tricanthos inermis 'Suncole'	Suncole Thornless Honeylocust
3	4" cal.	Quercus macrocarpa	Bur Oak
9	Total		
Evergreen Shrubs - Balled and Burlap or Pot			
16	30" Ht.	*Taxus x media 'Densiformis'*	Dense Yew
16	Total		
Deciduous Shrubs - Balled and Burlap or Pot			
7	24" ht.	Spiraea nipponica 'Snowmound'	Snowmound Spirea
12	24" ht.	Viburnum dentatum 'Blue Muffin'	Blue Muffin Viburnum
19	Total		
Perennials and Oranmental Grasses - Pot			
16	#1 cont.	Allium cernuum	Nodding Wild Onion
64	#1 cont.	Hemerocallis 'Going Bananas'	Going Bananas Daylily
67	#1 cont.	Hemerocallis 'Happy Returns'	Happy Returns Daylily
19	#1 cont.	Rudbeckia fulgida var. speciosa	Showy Black-Eyed Susan
12	#1 cont.	Sporobolus heterolepis	Prairie Dropseed
178	Total		

REQUIREMENT CHART

Public Way Frontage

Location	Requirement	Calculations	Proposed Landscaping
W Dundee Rd (Northern Lot Line)	3' height screening along public frontage, 18" height at intersections	Removal and replacement of poor condition/dead shrubs	19 shrubs

Parking Lot Island Landscaping

Location	Requirement	Calculations	Proposed Landscaping
Parking Lot	Islands equal to one parking space must contain one live shade tree at 4 caliper inches at the end of every 20 parking spaces or beneath every light pole, whichever is greater. Islands shall be located at each end of all rows of car stalls.	13 Parking Lot Islands	3 Existing Shade Trees 9 Proposed Shade Trees 86 Perennials

Landscape Requirements between Zoning Districts

Location	Requirement	Calculations	Proposed Landscaping
Southern Lot Line	Screening required and may consist of: masonry wall, solid wood fence, offset double-row of dense landscape material, and/or a berm	Removal and replacement of poor condition/dead shrubs	13 Evergreen Shrubs

North

SCALE: 1" = 20'-0"

0 10' 20' 40' 60'

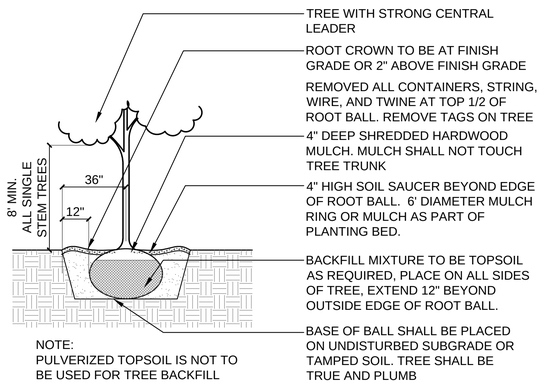

1 Tree Installation

SCALE: N.T.S. d-plant-tree_12

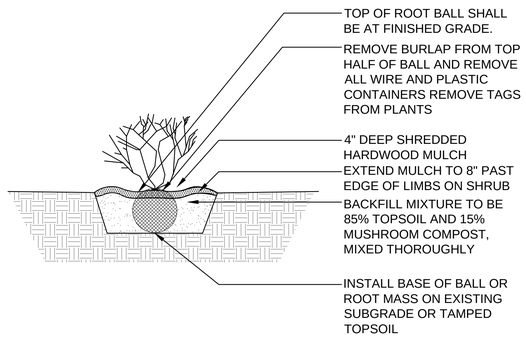

2 Shrub Installation

SCALE: N.T.S. d-plant-shrub_12

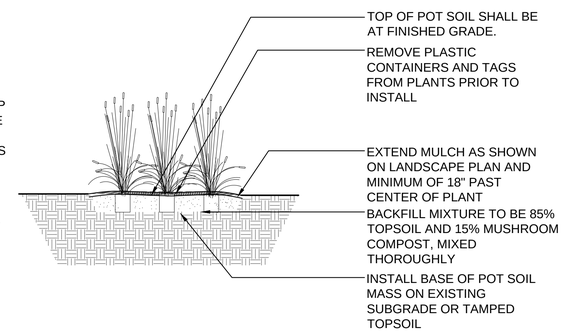

3 Perennial & Ornamental Grass Installation

SCALE: 1" = 1'-0" d-perennials

PROJECT

Mini Golf Site

955 W. Dundee Road
Arlington Heights, Illinois 60004

uplandDesign ltd
Park Planning and Landscape Architecture
24042 Lockport St, Plainfield, Illinois 60544
815-254-0091 www.uplanddesign.com

SHEET TITLE

Landscape Plan

SHEET NUMBER **L1.0**

DRAW / REVISION

LD/TD	Permit Submittal	24MAR2021
LD/DW	Permit Resubmittal	19MAY2021
MK/DW	Revision #2	16JUNE2021

Project Number 914

© Copyright 2021 Upland Design Ltd.