DRAFTED: MSL DESIGNED: JKB REVIEWED: BDJ 8/9/2021 12:45 PM – Z:\Projects\2020\2283.00-1\312 – ENGINEERING\FINAL\SHEETSET\C-6 UTILITY PLAN.dwg

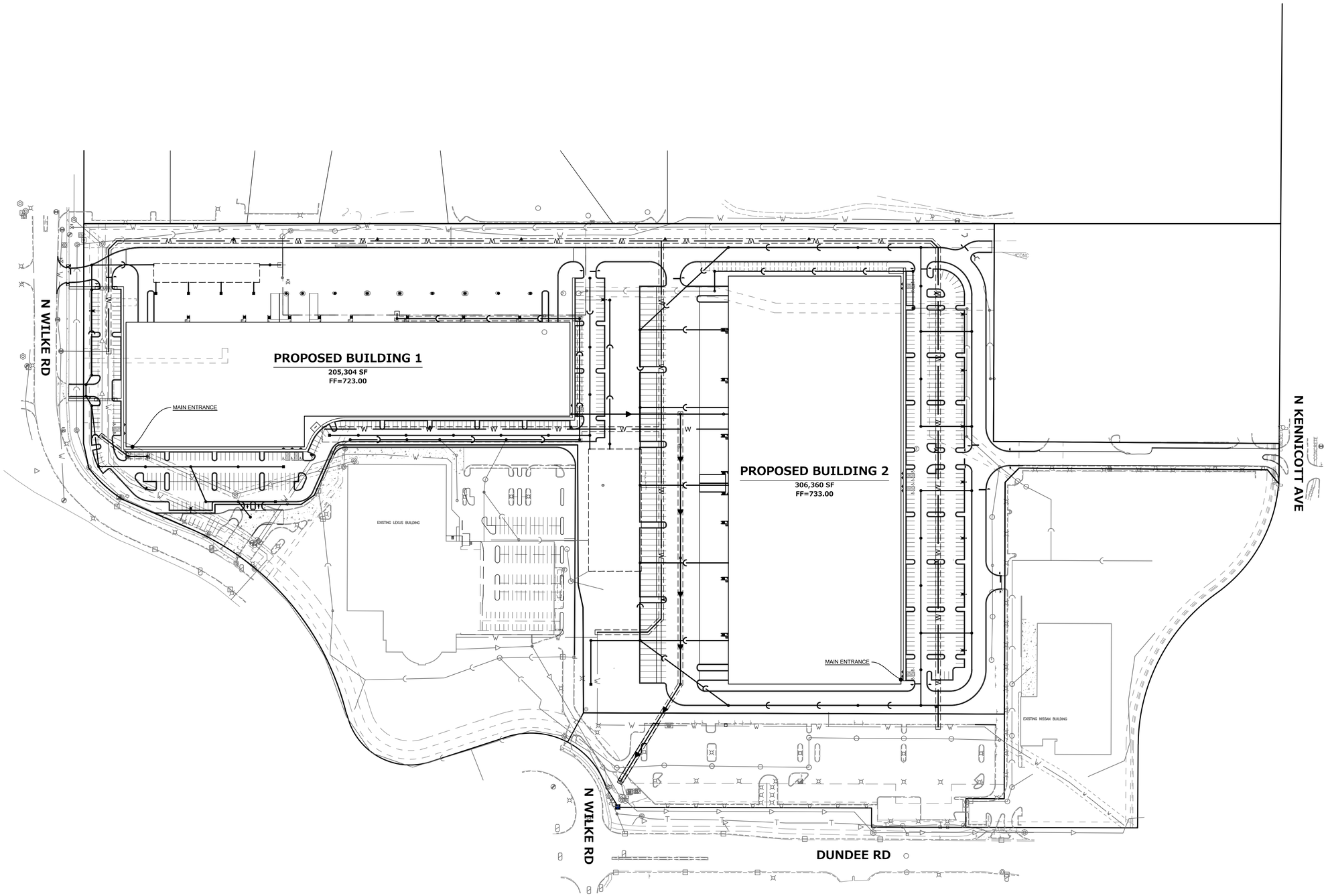

UTILITY NOTES

1. CONTRACTOR SHALL CONTACT 811 PRIOR TO CONSTRUCTION AND NOTIFY ENGINEERING OF ANY CONFLICTS WITH THE PROPOSED IMPROVEMENTS.
2. CONTRACTOR SHALL BE RESPONSIBLE FOR OBTAINING ALL PERMITS REQUIRED FOR UTILITY CONSTRUCTION.
3. ALL EXISTING INFORMATION AND EXISTING UTILITIES SHOWN ON THIS PLAN HAVE BEEN DETERMINED FROM THE BEST INFORMATION AVAILABLE AND ARE GIVEN FOR THE CONVENIENCE OF THE CONTRACTOR. THE ENGINEER ASSUMES NO RESPONSIBILITY FOR THEIR ACCURACY. PRIOR TO THE START OF ANY DEMOLITION ACTIVITY, THE CONTRACTOR SHALL NOTIFY THE UTILITY COMPANIES FOR LOCATION OF EXISTING UTILITIES.
4. ALL UTILITIES SHALL BE COORDINATED WITH THE APPROPRIATE UTILITY COMPANY OR AGENCY.
5. ALL MANHOLES AND VALVE VAULTS SHALL HAVE THE "VILLAGE OF ARLINGTON HEIGHTS" AND "WATER," "STORM SEWER," OR "SANITARY SEWER" CAST INTO THE LID. ANY LIDS OR GRATES SHALL HAVE THE WORDS "DRAINS TO RIVER, DUMP NO WASTE" PERMANENTLY INSCRIBED.
6. BUILDING DIMENSIONS, GRADING, PARKING, AND UTILITY LAYOUT HAVE BEEN PREPARED BASED UPON ARCHITECTURAL INFORMATION. SUBSEQUENT ARCHITECTURAL CHANGES MAY EXIST AND CONTRACTOR SHALL REFER TO ARCHITECTURAL PLANS FOR ADDITIONAL INFORMATION. IN CASE OF DISCREPANCIES BETWEEN ARCHITECTURAL PLANS AND CIVIL PLANS, THE CIVIL PLANS SHALL TAKE PRECEDENCE.
7. CONTRACTOR SHALL VERIFY LOCATION, SIZE, AND ELEVATION OF ALL BUILDING SERVICES WITH ARCHITECTURAL AND MEP PLANS.
8. CONTRACTOR SHALL ADJUST ALL RIM ELEVATIONS OF EXISTING STRUCTURES TO PROPOSED GRADE.
9. ALL UTILITY DIMENSIONS ARE TO CENTER OF PIPE OR CENTER OF STRUCTURE UNLESS OTHERWISE NOTED.
10. CONTRACTOR SHALL CONTACT EACH UTILITY COMPANY AND COORDINATE FINAL LOCATIONS OF ALL ELECTRIC, GAS, AND TELEPHONE SERVICES PRIOR TO START OF CONSTRUCTION.
11. CONTRACTOR SHALL LOCATE ALL EXISTING SEWER AND WATERMAIN LOCATION, SIZE, ELEVATION, AND CONDITION AT POINTS OF CONNECTION AND WHERE PROPOSED UTILITIES SHALL CROSS OR POTENTIALLY COME IN CONFLICT WITH EXISTING LINES PRIOR TO CONSTRUCTION. CONTRACTOR SHALL NOTIFY ENGINEERING OF ANY DISCREPANCIES OR CONFLICTS.
12. LIGHTING IS SHOWN FOR REFERENCE ONLY. REFER TO PHOTOMETRICS PLAN FOR CONSTRUCTION.
13. UNDERGROUND IMPROVEMENTS SHALL BE CONSTRUCTED AND TESTED IN ACCORDANCE WITH THE CITY, THE STANDARD SPECIFICATIONS FOR WATER AND SEWER MAIN CONSTRUCTION IN ILLINOIS, AND STANDARD SPECIFICATIONS FOR ROAD AND BRIDGE CONSTRUCTION, IDOT. IN THE EVENT OF CONFLICTING GUIDELINES, THE MORE RESTRICTIVE SHALL GOVERN.
14. ALL UTILITY STRUCTURES THAT WILL BE REUSED WILL HAVE THEIR CONDITION ASSESSED TO DETERMINE IF THEY CAN BE MODIFIED FOR PROPOSED CONNECTION.
15. COORDINATE ALL WATER MAIN SHUTDOWNS WITH VILLAGE STAFF AT LEAST FORTY-EIGHT HOURS (48-HRS) IN ADVANCE.

LEGEND

EXISTING	PROPOSED	
		SANITARY MANHOLE
		STORM MANHOLE
		CATCH BASIN/RISER
		INLET
		PRECAST FLARED END SECTION
		CONCRETE HEADWALL
		VALVE VAULT
		VALVE BOX
		FIRE HYDRANT
		BUFFALO BOX
		CLEANOUT
		SANITARY SEWER
		FORCEMAIN
		STORM SEWER
W	W	WATERMAIN
		STREET LIGHT
		STREET SIGN
		LABELED UTILITY CROSSING

DETENTION SYSTEM MAINTENANCE

ACTIVITY SCHEDULE (UNDERGROUND DETENTION STORAGE)

AS NEEDED

- SEDIMENT SHOULD BE REMOVED AS NEEDED (AT LEAST ONCE EVERY 5 TO 10 YEARS)

QUARTERLY

- INSPECT INLET PIPE(S) AND OUTLET CONTROL STRUCTURE FOR CLOGGING AFTER EVERY STORM GREATER THAN ONE INCH
- REMOVE TRASH AND DEBRIS

NOTE:
THE GENERAL CONTRACTOR SHALL COORDINATE WITH UTILITY COMPANIES TO PROVIDE CABLE TV, PHONE, ELECTRIC, GAS AND IRRIGATION SERVICES. THE GENERAL CONTRACTOR SHALL BE RESPONSIBLE FOR SECURING SITE LAYOUTS AND SIZING FOR THESE UTILITIES PRIOR TO CONSTRUCTION AND SHALL COORDINATE AND PROVIDE CONDUIT CROSSINGS AS REQUIRED. THIS COORDINATION SHALL BE CONSIDERED INCIDENTAL TO GENERAL CONTRACTOR AGREEMENT WITH THE OWNER. ANY CONFLICTS IN UTILITIES SHALL BE CORRECTED BY THE GENERAL CONTRACTOR AT NO ADDITIONAL COST TO THE OWNER.

NORTH

GRAPHICAL SCALE (FEET)

0 1" = 100' 200'

PLAN I DESIGN I DELIVER
www.pinnacle-engr.com
PINNACLE ENGINEERING GROUP
ENGINEERING I NATURAL RESOURCES I SURVEYING
IL Design Firm 184.006289-0010
CHICAGO OFFICE:
1051 E. MAIN ST. | SUITE 217
EAST DUNDEE, IL 60118
(847) 551-5300
CHICAGO I MILWAUKEE : NATIONWIDE

NORTHWEST GATEWAY CENTER
1400-1500 WEST DUNDEE ROAD
ARLINGTON HEIGHTS, ILLINOIS

REVISIONS

OVERALL UTILITY PLAN

PEG JOB No. 2283.00-1L
PEG PM BDJ
START DATE 04/09/21
SCALE 1"=100'

SHEET C-15 OF C-28

OVERALL UTILITY PLAN

DRAFTED: MSL DESIGNED: JKB REVIEWED: BDJ 8/9/2021 12:45 PM – Z:\Projects\2020\2283.00-IL\312 – ENGINEERING\FINAL\SHEETS\C-6 UTILITY PLAN.dwg

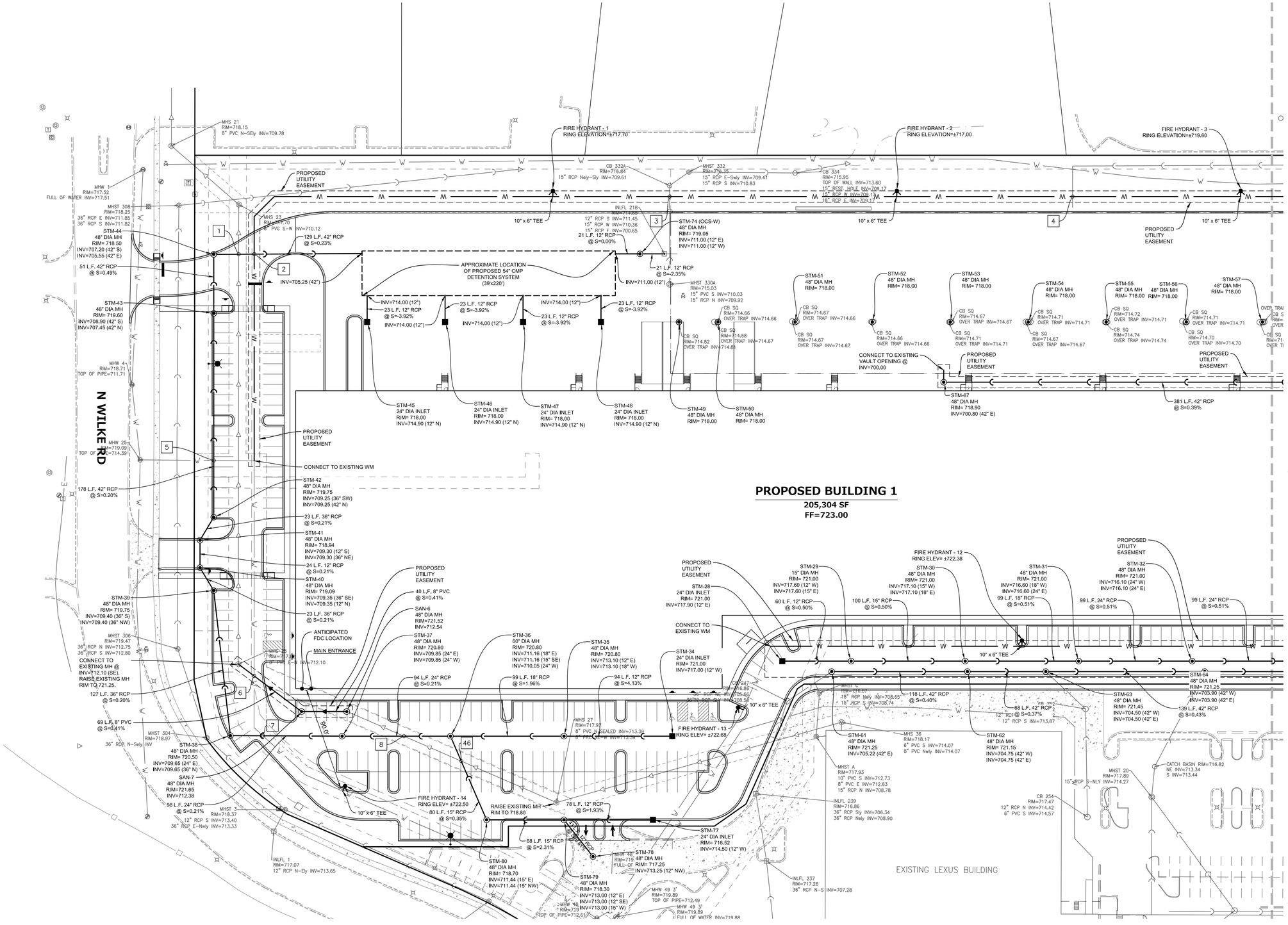

KEYMAP

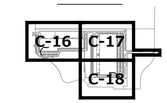

UTILITY NOTES

1. CONTRACTOR SHALL CONTACT 811 PRIOR TO CONSTRUCTION AND NOTIFY ENGINEERING OF ANY CONFLICTS WITH THE PROPOSED IMPROVEMENTS.
2. CONTRACTOR SHALL BE RESPONSIBLE FOR OBTAINING ALL PERMITS REQUIRED FOR UTILITY CONSTRUCTION.
3. ALL EXISTING INFORMATION AND EXISTING UTILITIES SHOWN ON THIS PLAN HAVE BEEN DETERMINED FROM THE BEST INFORMATION AVAILABLE AND ARE GIVEN FOR THE CONVENIENCE OF THE CONTRACTOR. THE ENGINEER ASSUMES NO RESPONSIBILITY FOR THEIR ACCURACY. PRIOR TO THE START OF ANY DEMOLITION ACTIVITY, THE CONTRACTOR SHALL NOTIFY THE UTILITY COMPANIES FOR LOCATION OF EXISTING UTILITIES.
4. ALL UTILITIES SHALL BE COORDINATED WITH THE APPROPRIATE UTILITY COMPANY OR AGENCY.
5. ALL MANHOLES AND VALVE VAULTS SHALL HAVE THE "VILLAGE OF ARLINGTON HEIGHTS" AND "WATER," "STORM SEWER," OR "SANITARY SEWER" CAST INTO THE LID. ANY LIDS OR GRATES SHALL HAVE THE WORDS "DRAINS TO RIVER, DUMP NO WASTE" PERMANENTLY INSCRIBED.
6. BUILDING DIMENSIONS, GRADING, PARKING, AND UTILITY LAYOUT HAVE BEEN PREPARED BASED UPON ARCHITECTURAL INFORMATION. SUBSEQUENT ARCHITECTURAL CHANGES MAY EXIST AND CONTRACTOR SHALL REFER TO ARCHITECTURAL PLANS FOR ADDITIONAL INFORMATION. IN CASE OF DISCREPANCIES BETWEEN ARCHITECTURAL PLANS AND CIVIL PLANS, THE CIVIL PLANS SHALL TAKE PRECEDENCE.
7. CONTRACTOR SHALL VERIFY LOCATION, SIZE, AND ELEVATION OF ALL BUILDING SERVICES WITH ARCHITECTURAL AND MEP PLANS.
8. CONTRACTOR SHALL ADJUST ALL RIM ELEVATIONS OF EXISTING STRUCTURES TO PROPOSED GRADE.
9. ALL UTILITY DIMENSIONS ARE TO CENTER OF PIPE OR CENTER OF STRUCTURE UNLESS OTHERWISE NOTED.
10. CONTRACTOR SHALL CONTACT EACH UTILITY COMPANY AND COORDINATE FINAL LOCATIONS OF ALL ELECTRIC, GAS, AND TELEPHONE SERVICES PRIOR TO START OF CONSTRUCTION.
11. CONTRACTOR SHALL LOCATE ALL EXISTING SEWER AND WATERMAIN LOCATION, SIZE, ELEVATION, AND CONDITION AT POINTS OF CONNECTION AND WHERE PROPOSED UTILITIES SHALL CROSS OR POTENTIALLY COME IN CONFLICT WITH EXISTING LINES PRIOR TO CONSTRUCTION. CONTRACTOR SHALL NOTIFY ENGINEERING OF ANY DISCREPANCIES OR CONFLICTS.
12. LIGHTING IS SHOWN FOR REFERENCE ONLY. REFER TO PHOTOMETRICS PLAN FOR CONSTRUCTION.
13. UNDERGROUND IMPROVEMENTS SHALL BE CONSTRUCTED AND TESTED IN ACCORDANCE WITH THE CITY, THE STANDARD SPECIFICATIONS FOR WATER AND SEWER MAIN CONSTRUCTION IN ILLINOIS, AND STANDARD SPECIFICATIONS FOR ROAD AND BRIDGE CONSTRUCTION, IDOT. IN THE EVENT OF CONFLICTING GUIDELINES, THE MORE RESTRICTIVE SHALL GOVERN.
14. ALL UTILITY STRUCTURES THAT WILL BE REUSED WILL HAVE THEIR CONDITION ASSESSED TO DETERMINE IF THEY CAN BE MODIFIED FOR PROPOSED CONNECTION.
15. COORDINATE ALL WATER MAIN SHUTDOWNS WITH VILLAGE STAFF AT LEAST FORTY-EIGHT HOURS (48-HRS) IN ADVANCE.

LEGEND

EXISTING	PROPOSED	
		SANITARY MANHOLE
		STORM MANHOLE
		CATCH BASIN/RISER
		INLET
		PRECAST FLARED END SECTION
		CONCRETE HEADWALL
		VALVE VAULT
		VALVE BOX
		FIRE HYDRANT
		BUFFALO BOX
		CLEANOUT
		SANITARY SEWER
		FORCEMAIN
		STORM SEWER
		WATERMAIN
		STREET LIGHT
		STREET SIGN
		LABELED UTILITY CROSSING

DETENTION SYSTEM MAINTENANCE

ACTIVITY SCHEDULE (UNDERGROUND DETENTION STORAGE)

AS NEEDED

- SEDIMENT SHOULD BE REMOVED AS NEEDED (AT LEAST ONCE EVERY 5 TO 10 YEARS)

QUARTERLY

- INSPECT INLET PIPE(S) AND OUTLET CONTROL STRUCTURE FOR CLOGGING AFTER EVERY STORM GREATER THAN ONE INCH
- REMOVE TRASH AND DEBRIS

NOTE:
THE GENERAL CONTRACTOR SHALL COORDINATE WITH UTILITY COMPANIES TO PROVIDE CABLE TV, PHONE, ELECTRIC, GAS AND IRRIGATION SERVICES. THE GENERAL CONTRACTOR SHALL BE RESPONSIBLE FOR SECURING SITE LAYOUTS AND SIZING FOR THESE UTILITIES PRIOR TO CONSTRUCTION AND SHALL COORDINATE AND PROVIDE CONDUIT CROSSINGS AS REQUIRED. THIS COORDINATION SHALL BE CONSIDERED INCIDENTAL TO GENERAL CONTRACTOR AGREEMENT WITH THE OWNER. ANY CONFLICTS IN UTILITIES SHALL BE CORRECTED BY THE GENERAL CONTRACTOR AT NO ADDITIONAL COST TO THE OWNER.

PLAN | DESIGN | DELIVER
www.pinnacle-engr.com
PINNACLE ENGINEERING GROUP
ENGINEERING | NATURAL RESOURCES | SURVEYING
IL Design Firm 184.006289-0010
CHICAGO OFFICE:
1051 E. MAIN ST. | SUITE 217
EAST DUNDEE, IL 60118
(847) 551-5300
CHICAGO | MILWAUKEE : NATIONWIDE

NORTHWEST GATEWAY CENTER
1400-1500 WEST DUNDEE ROAD
ARLINGTON HEIGHTS, ILLINOIS

REVISIONS

UTILITY PLAN

PEG JOB No. 2283.00-IL
PEG PM BDJ
START DATE 04/09/21
SCALE 1"=40'

SHEET C-16 OF C-28

UTILITY PLAN

DRAFTED: MSL DESIGNED: JKB REVIEWED: BDJ 8/9/2021 12:46 PM – Z:\Project\2020\2283.00-IL\312 – ENGINEERING\FINAL\SHEETSET\C-6 UTILITY PLAN.dwg

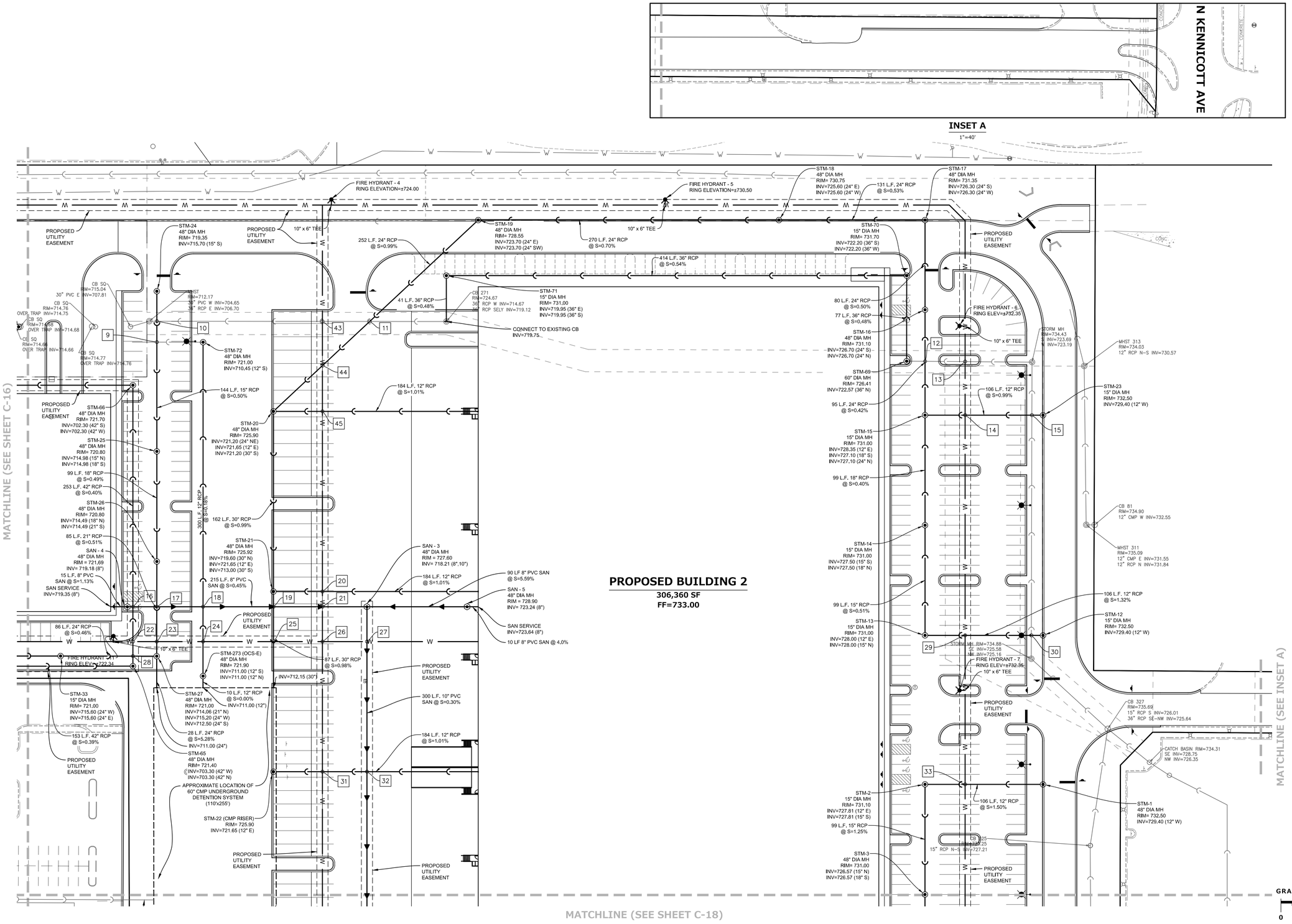

KEYMAP

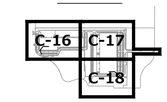

UTILITY NOTES

1. CONTRACTOR SHALL CONTACT 811 PRIOR TO CONSTRUCTION AND NOTIFY ENGINEERING OF ANY CONFLICTS WITH THE PROPOSED IMPROVEMENTS.
2. CONTRACTOR SHALL BE RESPONSIBLE FOR OBTAINING ALL PERMITS REQUIRED FOR UTILITY CONSTRUCTION.
3. ALL EXISTING INFORMATION AND EXISTING UTILITIES SHOWN ON THIS PLAN HAVE BEEN DETERMINED FROM THE BEST INFORMATION AVAILABLE AND ARE GIVEN FOR THE CONVENIENCE OF THE CONTRACTOR. THE ENGINEER ASSUMES NO RESPONSIBILITY FOR THEIR ACCURACY. PRIOR TO THE START OF ANY DEMOLITION ACTIVITY, THE CONTRACTOR SHALL NOTIFY THE UTILITY COMPANIES FOR LOCATION OF EXISTING UTILITIES.
4. ALL UTILITIES SHALL BE COORDINATED WITH THE APPROPRIATE UTILITY COMPANY OR AGENCY.
5. ALL MANHOLES AND VALVE VAULTS SHALL HAVE THE "VILLAGE OF ARLINGTON HEIGHTS" AND "WATER," "STORM SEWER," OR "SANITARY SEWER" CAST INTO THE LID. ANY LIDS OR GRATES SHALL HAVE THE WORDS "DRAINS TO RIVER, DUMP NO WASTE" PERMANENTLY INSCRIBED.
6. BUILDING DIMENSIONS, GRADING, PARKING, AND UTILITY LAYOUT HAVE BEEN PREPARED BASED UPON ARCHITECTURAL INFORMATION. SUBSEQUENT ARCHITECTURAL CHANGES MAY EXIST AND CONTRACTOR SHALL REFER TO ARCHITECTURAL PLANS FOR ADDITIONAL INFORMATION. IN CASE OF DISCREPANCIES BETWEEN ARCHITECTURAL PLANS AND CIVIL PLANS, THE CIVIL PLANS SHALL TAKE PRECEDENCE.
7. CONTRACTOR SHALL VERIFY LOCATION, SIZE, AND ELEVATION OF ALL BUILDING SERVICES WITH ARCHITECTURAL AND MEP PLANS.
8. CONTRACTOR SHALL ADJUST ALL RIM ELEVATIONS OF EXISTING STRUCTURES TO PROPOSED GRADE.
9. ALL UTILITY DIMENSIONS ARE TO CENTER OF PIPE OR CENTER OF STRUCTURE UNLESS OTHERWISE NOTED.
10. CONTRACTOR SHALL CONTACT EACH UTILITY COMPANY AND COORDINATE FINAL LOCATIONS OF ALL ELECTRIC, GAS, AND TELEPHONE SERVICES PRIOR TO START OF CONSTRUCTION.
11. CONTRACTOR SHALL LOCATE ALL EXISTING SEWER AND WATERMAIN LOCATION, SIZE, ELEVATION, AND CONDITION AT POINTS OF CONNECTION AND WHERE PROPOSED UTILITIES SHALL CROSS OR POTENTIALLY COME IN CONFLICT WITH EXISTING LINES PRIOR TO CONSTRUCTION. CONTRACTOR SHALL NOTIFY ENGINEERING OF ANY DISCREPANCIES OR CONFLICTS.
12. LIGHTING IS SHOWN FOR REFERENCE ONLY. REFER TO PHOTOMETRICS PLAN FOR CONSTRUCTION.
13. UNDERGROUND IMPROVEMENTS SHALL BE CONSTRUCTED AND TESTED IN ACCORDANCE WITH THE CITY, THE STANDARD SPECIFICATIONS FOR WATER AND SEWER MAIN CONSTRUCTION IN ILLINOIS, AND STANDARD SPECIFICATIONS FOR ROAD AND BRIDGE CONSTRUCTION, IDOT. IN THE EVENT OF CONFLICTING GUIDELINES, THE MORE RESTRICTIVE SHALL GOVERN.
14. ALL UTILITY STRUCTURES THAT WILL BE REUSED WILL HAVE THEIR CONDITION ASSESSED TO DETERMINE IF THEY CAN BE MODIFIED FOR PROPOSED CONNECTION.
15. COORDINATE ALL WATER MAIN SHUTDOWNS WITH VILLAGE STAFF AT LEAST FORTY-EIGHT HOURS (48-HRS) IN ADVANCE.

LEGEND

EXISTING	PROPOSED	
		SANITARY MANHOLE
		STORM MANHOLE
		CATCH BASIN/RISER
		INLET
		PRECAST FLARED END SECTION
		CONCRETE HEADWALL
		VALVE VAULT
		VALVE BOX
		FIRE HYDRANT
		BUFFALO BOX
		CLEANOUT
		SANITARY SEWER
		FORCEMAIN
		STORM SEWER
W	W	WATERMAIN
		STREET LIGHT
		STREET SIGN
		LABELED UTILITY CROSSING

DETENTION SYSTEM MAINTENANCE

ACTIVITY SCHEDULE (UNDERGROUND DETENTION STORAGE)

AS NEEDED

- SEDIMENT SHOULD BE REMOVED AS NEEDED (AT LEAST ONCE EVERY 5 TO 10 YEARS)

QUARTERLY

- INSPECT INLET PIPE(S) AND OUTLET CONTROL STRUCTURE FOR CLOGGING AFTER EVERY STORM GREATER THAN ONE INCH
- REMOVE TRASH AND DEBRIS

NORTH

GRAPHICAL SCALE (FEET)

0 1" = 40' 80'

NOTE:
THE GENERAL CONTRACTOR SHALL COORDINATE WITH UTILITY COMPANIES TO PROVIDE CABLE TV, PHONE, ELECTRIC, GAS AND IRRIGATION SERVICES. THE GENERAL CONTRACTOR SHALL BE RESPONSIBLE FOR SECURING SITE LAYOUTS AND SIZING FOR THESE UTILITIES PRIOR TO CONSTRUCTION AND SHALL COORDINATE AND PROVIDE CONDUIT CROSSINGS AS REQUIRED. THIS COORDINATION SHALL BE CONSIDERED INCIDENTAL TO GENERAL CONTRACTOR AGREEMENT WITH THE OWNER. ANY CONFLICTS IN UTILITIES SHALL BE CORRECTED BY THE GENERAL CONTRACTOR AT NO ADDITIONAL COST TO THE OWNER.

PLAN I DESIGN I DELIVER
www.pinnacle-engr.com
PINNACLE ENGINEERING GROUP
ENGINEERING I NATURAL RESOURCES I SURVEYING
IL Design Firm 184.006289-0010
CHICAGO OFFICE:
1051 E. MAIN ST. | SUITE 217
EAST DUNDEE, IL 60118
(847) 551-5300
CHICAGO I MILWAUKEE : NATIONWIDE

NORTHWEST GATEWAY CENTER
1400-1500 WEST DUNDEE ROAD
ARLINGTON HEIGHTS, ILLINOIS

REVISIONS

UTILITY PLAN

PEG JOB No. 2283.00-IL
PEG PM BDJ
START DATE 04/09/21
SCALE 1"=40'

SHEET C-17 OF C-28

UTILITY PLAN

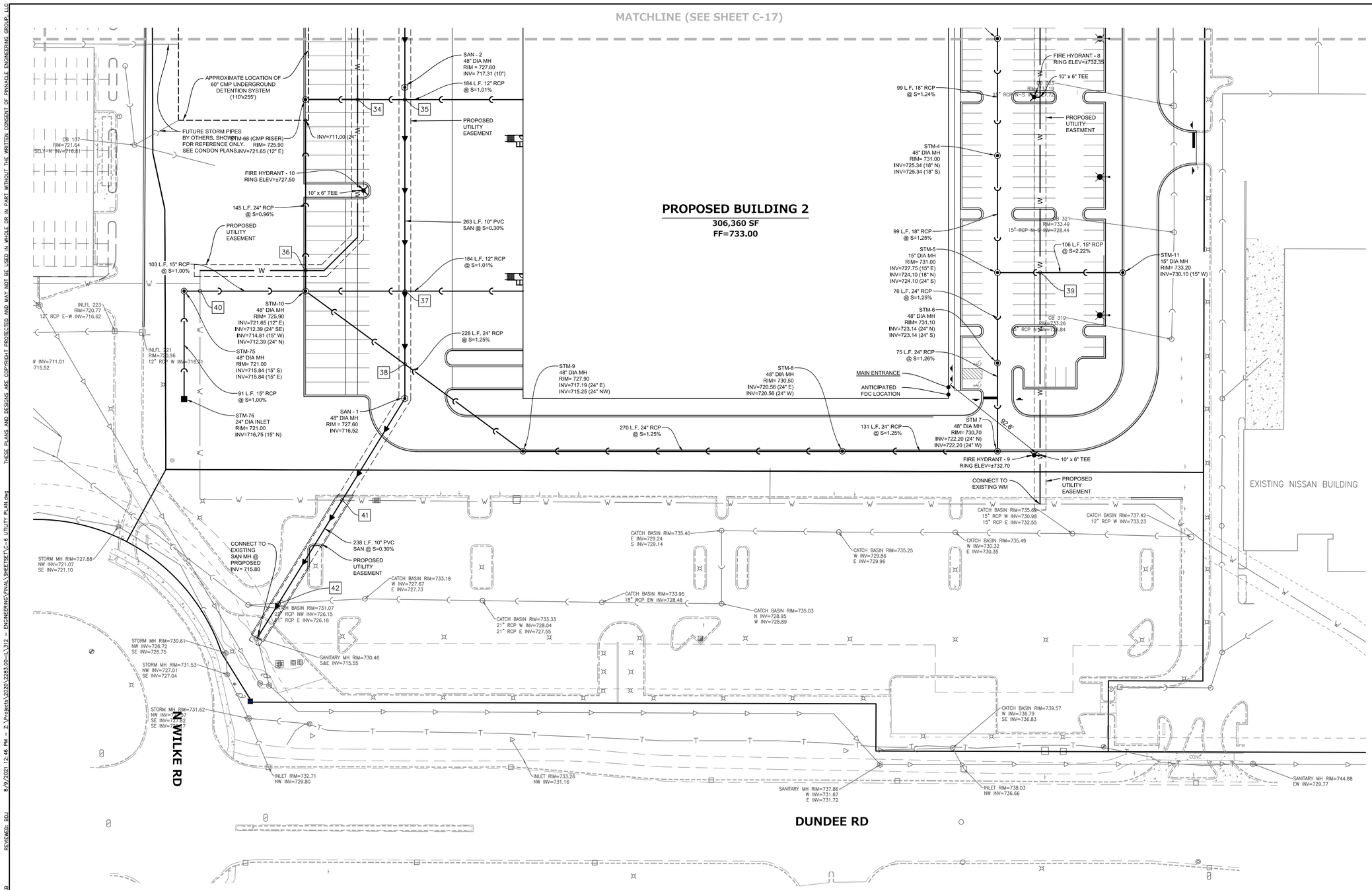

KEYMAP

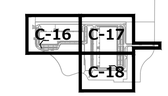

UTILITY NOTES

1. CONTRACTOR SHALL CONTACT 811 PRIOR TO CONSTRUCTION AND NOTIFY ENGINEERING OF ANY CONFLICTS WITH THE PROPOSED IMPROVEMENTS.
2. CONTRACTOR SHALL BE RESPONSIBLE FOR OBTAINING ALL PERMITS REQUIRED FOR UTILITY CONSTRUCTION.
3. ALL EXISTING INFORMATION AND EXISTING UTILITIES SHOWN ON THIS PLAN HAVE BEEN DETERMINED FROM THE BEST INFORMATION AVAILABLE AND ARE GIVEN FOR THE CONVENIENCE OF THE CONTRACTOR. THE ENGINEER ASSUMES NO RESPONSIBILITY FOR THEIR ACCURACY. PRIOR TO THE START OF ANY DEMOLITION ACTIVITY, THE CONTRACTOR SHALL NOTIFY THE UTILITY COMPANIES FOR LOCATION OF EXISTING UTILITIES.
4. ALL UTILITIES SHALL BE COORDINATED WITH THE APPROPRIATE UTILITY COMPANY OR AGENCY.
5. ALL MANHOLES AND VALVE VAULTS SHALL HAVE THE "VILLAGE OF ARLINGTON HEIGHTS" AND "WATER," "STORM SEWER," OR "SANITARY SEWER" CAST INTO THE LID. ANY LIDS OR GRATES SHALL HAVE THE WORDS "DRAINS TO RIVER, DUMP NO WASTE" PERMANENTLY INSCRIBED.
6. BUILDING DIMENSIONS, GRADING, PARKING, AND UTILITY LAYOUT HAVE BEEN PREPARED BASED UPON ARCHITECTURAL INFORMATION. SUBSEQUENT ARCHITECTURAL CHANGES MAY EXIST AND CONTRACTOR SHALL REFER TO ARCHITECTURAL PLANS FOR ADDITIONAL INFORMATION. IN CASE OF DISCREPANCIES BETWEEN ARCHITECTURAL PLANS AND CIVIL PLANS, THE CIVIL PLANS SHALL TAKE PRECEDENCE.
7. CONTRACTOR SHALL VERIFY LOCATION, SIZE, AND ELEVATION OF ALL BUILDING SERVICES WITH ARCHITECTURAL AND MEP PLANS.
8. CONTRACTOR SHALL ADJUST ALL RIM ELEVATIONS OF EXISTING STRUCTURES TO PROPOSED GRADE.
9. ALL UTILITY DIMENSIONS ARE TO CENTER OF PIPE OR CENTER OF STRUCTURE UNLESS OTHERWISE NOTED.
10. CONTRACTOR SHALL CONTACT EACH UTILITY COMPANY AND COORDINATE FINAL LOCATIONS OF ALL ELECTRIC, GAS, AND TELEPHONE SERVICES PRIOR TO START OF CONSTRUCTION.
11. CONTRACTOR SHALL LOCATE ALL EXISTING SEWER AND WATERMAIN LOCATION, SIZE, ELEVATION, AND CONDITION AT POINTS OF CONNECTION AND WHERE PROPOSED UTILITIES SHALL CROSS OR POTENTIALLY COME IN CONFLICT WITH EXISTING LINES PRIOR TO CONSTRUCTION. CONTRACTOR SHALL NOTIFY ENGINEERING OF ANY DISCREPANCIES OR CONFLICTS.
12. LIGHTING IS SHOWN FOR REFERENCE ONLY. REFER TO PHOTOMETRICS PLAN FOR CONSTRUCTION.
13. UNDERGROUND IMPROVEMENTS SHALL BE CONSTRUCTED AND TESTED IN ACCORDANCE WITH THE CITY, THE STANDARD SPECIFICATIONS FOR WATER AND SEWER MAIN CONSTRUCTION IN ILLINOIS, AND STANDARD SPECIFICATIONS FOR ROAD AND BRIDGE CONSTRUCTION, IDOT. IN THE EVENT OF CONFLICTING GUIDELINES, THE MORE RESTRICTIVE SHALL GOVERN.
14. ALL UTILITY STRUCTURES THAT WILL BE REUSED WILL HAVE THEIR CONDITION ASSESSED TO DETERMINE IF THEY CAN BE MODIFIED FOR PROPOSED CONNECTION.
15. COORDINATE ALL WATER MAIN SHUTDOWNS WITH VILLAGE STAFF AT LEAST FORTY-EIGHT HOURS (48-HRS) IN ADVANCE.

LEGEND

EXISTING	PROPOSED	
		SANITARY MANHOLE
		STORM MANHOLE
		CATCH BASIN/RISER
		INLET
		PRECAST FLARED END SECTION
		CONCRETE HEADWALL
		VALVE VAULT
		VALVE BOX
		FIRE HYDRANT
		BUFFALO BOX
		CLEANOUT
		SANITARY SEWER
		FORCEMAIN
		STORM SEWER
W	W	WATERMAIN
		STREET LIGHT
		STREET SIGN
		LABELED UTILITY CROSSING

DETENTION SYSTEM MAINTENANCE

ACTIVITY SCHEDULE (UNDERGROUND DETENTION STORAGE)

AS NEEDED

- SEDIMENT SHOULD BE REMOVED AS NEEDED (AT LEAST ONCE EVERY 5 TO 10 YEARS)

QUARTERLY

- INSPECT INLET PIPE(S) AND OUTLET CONTROL STRUCTURE FOR CLOGGING AFTER EVERY STORM GREATER THAN ONE INCH
- REMOVE TRASH AND DEBRIS

NORTH

GRAPHICAL SCALE (FEET)

0 1" = 40' 80'

NOTE:
THE GENERAL CONTRACTOR SHALL COORDINATE WITH UTILITY COMPANIES TO PROVIDE CABLE TV, PHONE, ELECTRIC, GAS AND IRRIGATION SERVICES. THE GENERAL CONTRACTOR SHALL BE RESPONSIBLE FOR SECURING SITE LAYOUTS AND SIZING FOR THESE UTILITIES PRIOR TO CONSTRUCTION AND SHALL COORDINATE AND PROVIDE CONDUIT CROSSINGS AS REQUIRED. THIS COORDINATION SHALL BE CONSIDERED INCIDENTAL TO GENERAL CONTRACTOR AGREEMENT WITH THE OWNER. ANY CONFLICTS IN UTILITIES SHALL BE CORRECTED BY THE GENERAL CONTRACTOR AT NO ADDITIONAL COST TO THE OWNER.

PLAN I DESIGN I DELIVER
www.pinnacle-engr.com
PINNACLE ENGINEERING GROUP
ENGINEERING I NATURAL RESOURCES I SURVEYING
IL Design Firm 184.006289-0010
CHICAGO OFFICE:
1051 E. MAIN ST. I SUITE 217
EAST DUNDEE, IL 60118
(847) 551-5300
CHICAGO I MILWAUKEE : NATIONWIDE

NORTHWEST GATEWAY CENTER
1400-1500 WEST DUNDEE ROAD
ARLINGTON HEIGHTS, ILLINOIS

REVISIONS

UTILITY PLAN

PEG JOB No. 2283.00-1L
PEG PM BDJ
START DATE 04/09/21
SCALE 1"=40'

SHEET C-18 OF C-28

UTILITY PLAN

DRAFTED: MSL DESIGNED: JKB REVIEWED: BDJ 8/9/2021 12:46 PM – Z:\Project\2020\2283.00-IL\312 – ENGINEERING\FINAL\SHEETSET\C-6 UTILITY PLAN.dwg

DRAFTED: MSL DESIGNED: JKB REVIEWED: BDJ 8/9/2021 10:14 AM – Z:\Projects\2020\2283.00-IL\312 – ENGINEERING\FINAL\SHEETSET\C-7 SITE STABILIZATION

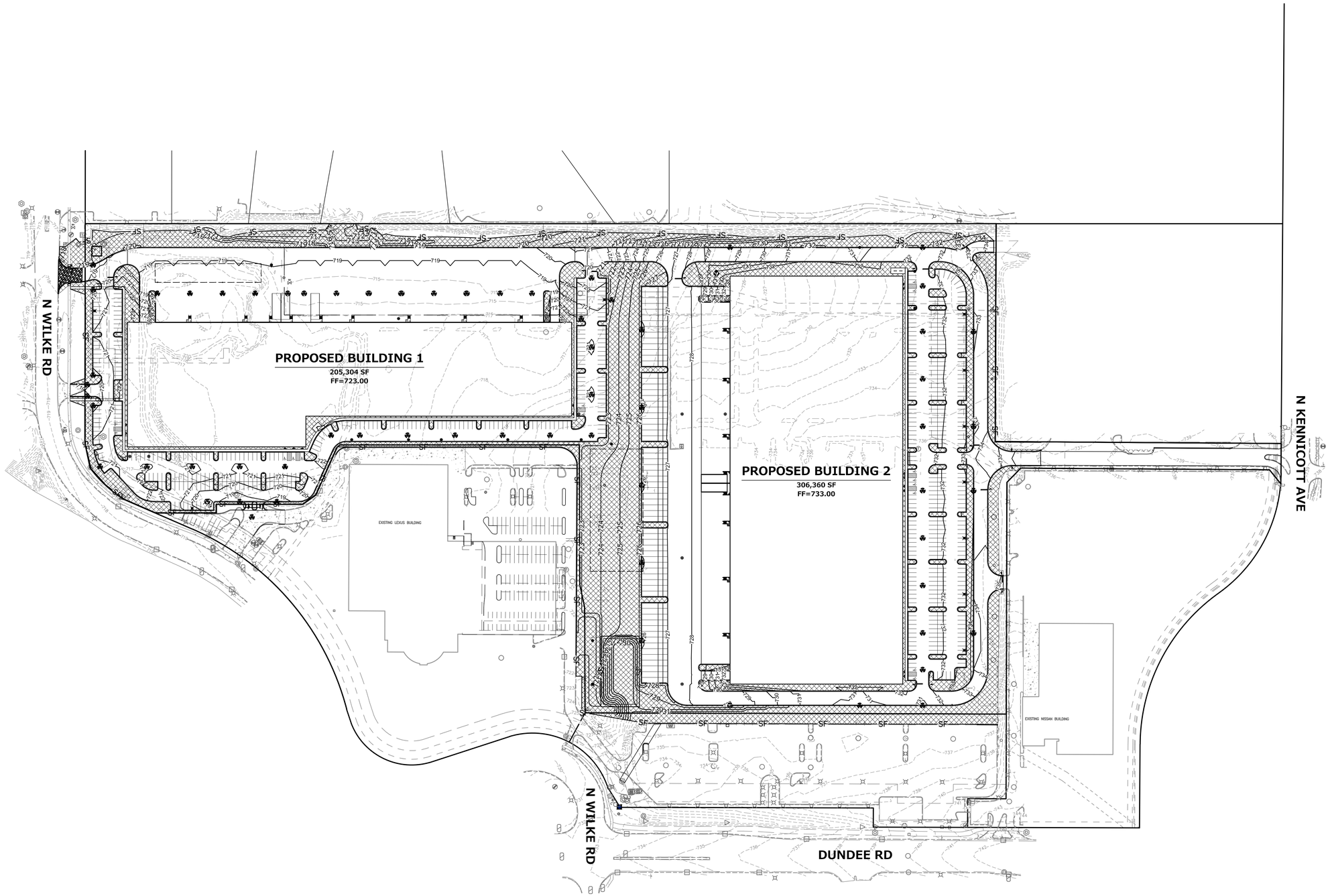

SITE STABILIZATION NOTES

1. AN INITIAL SEDIMENTATION AND EROSION CONTROL INSPECTION IS REQUIRED PRIOR TO STARTING CONSTRUCTION. CONTRACTOR SHALL CONTACT THE COMMUNITY DEVELOPMENT DEPARTMENT AT 630-434-5529 TO SCHEDULE THIS INSPECTION; THIS NOTIFICATION SHALL BE AT LEAST 24 HOURS IN ADVANCE OF CONSTRUCTION.
2. THE NOTICE OF INTENT (NOI) AND NPDES PERMIT SHALL BE OBTAINED PRIOR TO ANY EARTH MOVING ACTIVITIES.
3. ALL EROSION AND SEDIMENT CONTROL MEASURES ARE TO BE CONSTRUCTED AND MAINTAINED IN ACCORDANCE WITH THE ILLINOIS URBAN MANUAL, LATEST EDITION.
4. ALL EROSION AND SEDIMENT CONTROL MEASURES SHALL BE INSTALLED PRIOR TO THE START OF ANY CONSTRUCTION OR DISTURBANCE OF THE SITE. THE MEASURES MAY HAVE TO BE ADJUSTED TO MEET FIELD CONDITIONS DURING CONSTRUCTION. ANY MEASURES, IN ADDITION TO THOSE OUTLINED IN THE PLANS AND WHICH ARE DEEMED NECESSARY BY THE CITY, SHALL BE IMPLEMENTED IMMEDIATELY BY THE DEVELOPER. ALL TEMPORARY EROSION CONTROL MEASURES NECESSARY TO MEET THE REQUIREMENTS OF THE CITY OF PALATINE STORMWATER AND FLOOD PLAIN ORDINANCE SHALL BE KEPT OPERATIONAL AND MAINTAINED CONTINUOUSLY THROUGHOUT THE PERIOD OF LAND DISTURBANCE UNTIL PERMANENT SEDIMENT AND EROSION AND CONTROL MEASURES ARE OPERATIONAL.
5. REGULAR INSPECTION AND MAINTENANCE OF ALL EROSION AND SEDIMENT CONTROL MEASURES MUST BE PROVIDED BY THE DEVELOPER. INSPECTIONS SHOULD OCCUR WEEKLY, AND AFTER ANY RAINFALL GREATER THAN 1/2". ANY NON-FUNCTIONING SEDIMENT CONTROL MEASURES OR DAMAGED DEVICES THAT ARE FOUND DURING INSPECTION SHALL BE REPAIRED OR REPLACED IMMEDIATELY THE DEVELOPER SHALL BE RESPONSIBLE FOR ANY SEDIMENT WHICH LEAVES THE PROPERTY, AND THE DEVELOPER IS ALSO RESPONSIBLE FOR MAINTENANCE OF ALL SEDIMENT CONTROL MEASURES UNTIL THE SITE IS PERMANENTLY STABILIZED.
6. ALL POINTS OF CONSTRUCTION INGRESS AND EGRESS SHALL BE MADE ACROSS THE STABILIZED CONSTRUCTION ENTRANCE AND SHALL BE UTILIZED TO PREVENT TRACKING OF DEBRIS, DIRT, AND MUD ONTO ADJACENT STREETS, PARKING LOTS, OR PROPERTIES. ANY DEBRIS, DIRT, OR MUD THAT REACHES AN IMPROVED PUBLIC RIGHT-OF-WAY, STREET, OR PARKING AREA SHALL BE PROMPTLY REMOVED (BEFORE THE END OF EACH WORK DAY), AND TRANSPORTED TO A PROPER DISPOSAL AREA.
7. ALL SEDIMENT MUST BE PREVENTED FROM ENTERING ANY PUBLIC OR PRIVATE STORM DRAINAGE SYSTEM. REUSABLE INLET FILTER BASKETS (FLEXSTORM, CATCHALL, OR EQUIVALENT), SEDIMENT BASINS, AND WATER FILTERING BAGS,SHALL BE PROVIDED AS NEEDED.
8. ALL DRAINAGE SWALES SHALL BE STABILIZED WITH SPECIFIED EROSION CONTROL BLANKET.
9. TOPSOIL STOCKPILES SHALL BE LOCATED TO AVOID EROSION OF STOCKPILE ONTO NEIGHBORING PROPERTIES OR INTO RESTORED PROJECT AREAS. STOCKPILES SHALL BE LOCATED SO THAT A DRAINAGE SWALE IS LOCATED BETWEEN THE STOCKPILE AND ANY DOWNSTREAM PROPERTIES AND SHALL NOT BE LOCATED WITHIN ANY DRAINAGEWAYS, FLOOD PLAINS, WETLANDS OR LOCALIZED POOR DRAINAGE AREAS. IF A STOCKPILE IS TO REMAIN IN PLACE FOR MORE THAN 3 DAYS, IT MUST BE SEEDED AND BLANKETED TO MINIMIZE SOIL EROSION BY BOTH WIND AND WATER. REFER TO DETAIL ON SHEET C-15.
10. THE SURFACE OF STRIPPED AREAS SHALL BE PERMANENTLY OR TEMPORARY PROTECTED FROM SOIL EROSION WITHIN FIFTEEN DAYS AFTER FINAL GRADE IS REACHED. STRIPPED AREAS THAT WILL REMAIN UNDISTURBED FOR MORE THAN FIFTEEN DAYS AFTER INITIAL DISTURBANCE SHALL BE PROTECTED FROM EROSION.
11. THE DEVELOPER IS RESPONSIBLE FOR OBTAINING A SEPARATE NATIONAL POLLUTION DISCHARGE ELIMINATION SYSTEM (NPDES) PERMIT FROM THE ILLINOIS ENVIRONMENTAL PROTECTION AGENCY WHENEVER 1 ACRE OR MORE OF PROPERTY IS DISTURBED. FOR DEVELOPMENTS OVER 1 ACRE, THE DEVELOPER MUST ALSO PREPARE AND MAINTAIN A STORM WATER POLLUTION PREVENTION PLAN (SWPPP) AT THE PROJECT SITE, ALONG WITH THE NPDES PERMIT. FOR DEVELOPMENTS LESS THAN 1 ACRE, A SEDIMENT AND EROSION CONTROL PLAN MUST BE MAINTAINED BY THE DEVELOPER.
12. IF DEWATERING SERVICES ARE USED, OR IF THE VOLUME, VELOCITY, SEDIMENT LOAD, OR PEAK FLOW RATES OF STORMWATER RUNOFF ARE TEMPORARILY INCREASED DURING CONSTRUCTION, ADJACENT PROPERTIES AND DISCHARGE LOCATIONS SHALL BE PROTECTED FROM EROSION. DISCHARGES FROM CONSTRUCTION DEWATERING SHALL BE ROUTED THROUGH AN EFFECTIVE SEDIMENT CONTROL MEASURE SUCH AS A SEDIMENT TRAP, A SEDIMENT BASIN, OR ANY OTHER APPROPRIATE MEASURE.
13. ALL TEMPORARY EROSION AND SEDIMENT CONTROL MEASURES SHALL BE REMOVED WITHIN THIRTY (30) DAYS AFTER FINAL STABILIZATION IS ACHIEVED. TRAPPED SEDIMENT AND OTHER DISTURBED SOILS RESULTING FROM TEMPORARY MEASURES SHALL BE PROPERTY DISPOSED OF PRIOR TO PERMANENT STABILIZATION.
14. DURING CONSTRUCTION, CONTRACTOR SHALL PLUG RELEASE PIPE OF THE UNDERGROUND STORM WATER DETENTION SYSTEM AND DE WATER UNDERGROUND STORM WATER DETENTION AREA TO WEST BASIN. CONTRACTOR SHALL FLUSH UNDERGROUND DETENTION SYSTEM PRIOR TO GOING LIVE.

EROSION CONTROL LEGEND

	SEED & BLANKET NORTH AMERICAN GREEN S-75BN BLANKET (SEE LANDSCAPE PLAN FOR SEED MIX)
	INLET PROTECTION
—SF—	SILT FENCE

NORTH

GRAPHICAL SCALE (FEET)

0 1" = 100' 200'

PLAN I DESIGN I DELIVER
www.pinnacle-engr.com
PINNACLE ENGINEERING GROUP
ENGINEERING I NATURAL RESOURCES I SURVEYING
IL Design Firm 184.006289-0010
CHICAGO OFFICE:
1051 E. MAIN ST. | SUITE 217
EAST DUNDEE, IL 60118
(847) 551-5300
CHICAGO I MILWAUKEE : NATIONWIDE

NORTHWEST GATEWAY CENTER
1400-1500 WEST DUNDEE ROAD
ARLINGTON HEIGHTS, ILLINOIS

REVISIONS

OVERALL SITE STABILIZATION PLAN

PEG JOB No. 2283.00-IL
PEG PM BDJ
START DATE 04/09/21
SCALE 1"=100'

SHEET C-19 OF C-28

OVERALL SITE STABILIZATION PLAN

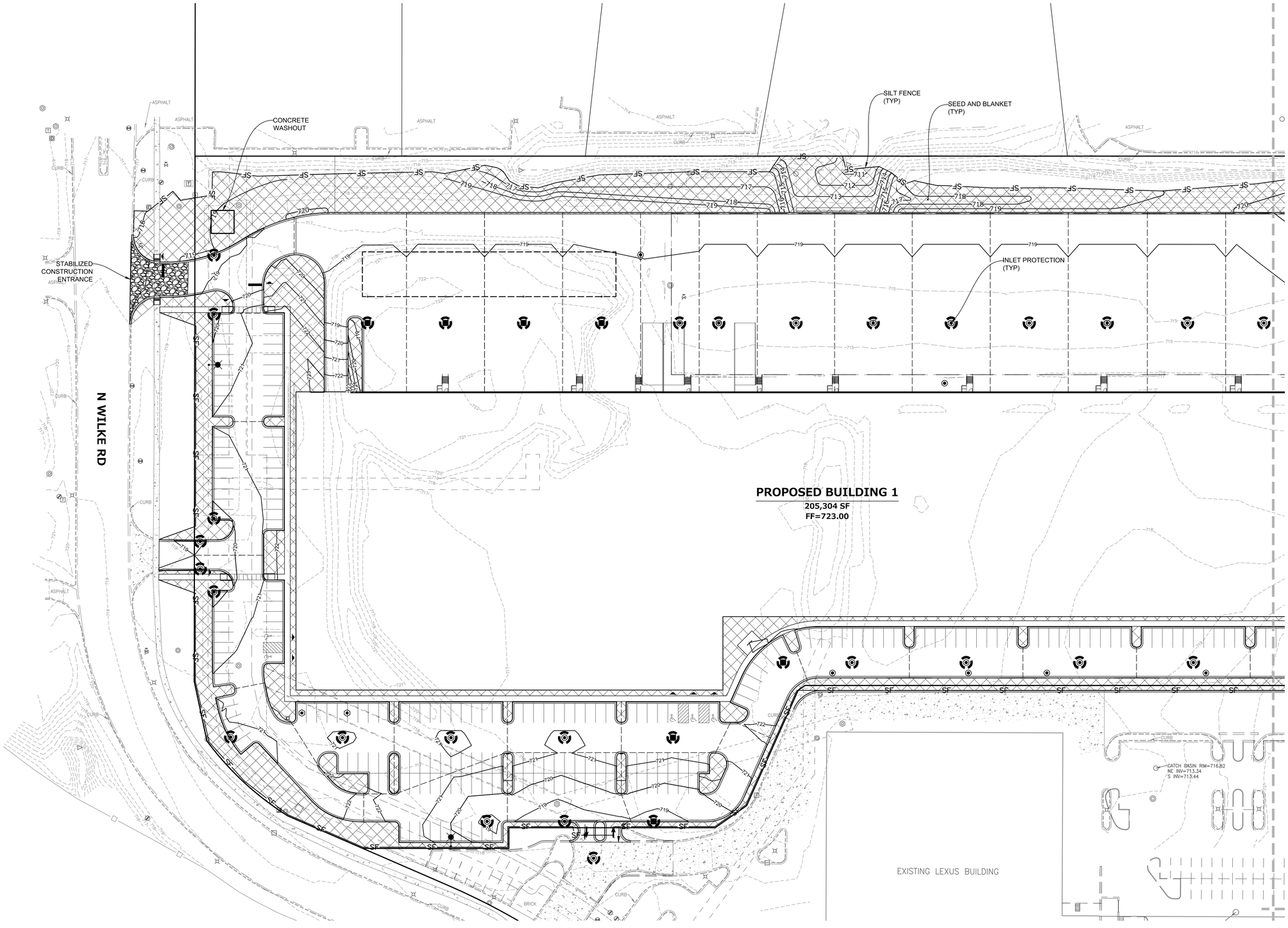

KEYMAP

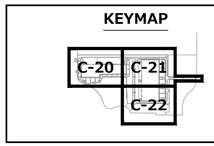

SITE STABILIZATION NOTES

1. AN INITIAL SEDIMENTATION AND EROSION CONTROL INSPECTION IS REQUIRED PRIOR TO STARTING CONSTRUCTION. CONTRACTOR SHALL CONTACT THE COMMUNITY DEVELOPMENT DEPARTMENT AT 630-434-5529 TO SCHEDULE THIS INSPECTION; THIS NOTIFICATION SHALL BE AT LEAST 24 HOURS IN ADVANCE OF CONSTRUCTION.
2. THE NOTICE OF INTENT (NOI) AND NPDES PERMIT SHALL BE OBTAINED PRIOR TO ANY EARTH MOVING ACTIVITIES.
3. ALL EROSION AND SEDIMENT CONTROL MEASURES ARE TO BE CONSTRUCTED AND MAINTAINED IN ACCORDANCE WITH THE ILLINOIS URBAN MANUAL, LATEST EDITION.
4. ALL EROSION AND SEDIMENT CONTROL MEASURES SHALL BE INSTALLED PRIOR TO THE START OF ANY CONSTRUCTION OR DISTURBANCE OF THE SITE. THE MEASURES MAY HAVE TO BE ADJUSTED TO MEET FIELD CONDITIONS DURING CONSTRUCTION. ANY MEASURES, IN ADDITION TO THOSE OUTLINED IN THE PLANS AND WHICH ARE DEEMED NECESSARY BY THE CITY, SHALL BE IMPLEMENTED IMMEDIATELY BY THE DEVELOPER. ALL TEMPORARY EROSION CONTROL MEASURES NECESSARY TO MEET THE REQUIREMENTS OF THE CITY OF PALATINE STORMWATER AND FLOOD PLAIN ORDINANCE SHALL BE KEPT OPERATIONAL AND MAINTAINED CONTINUOUSLY THROUGHOUT THE PERIOD OF LAND DISTURBANCE UNTIL PERMANENT SEDIMENT AND EROSION AND CONTROL MEASURES ARE OPERATIONAL.
5. REGULAR INSPECTION AND MAINTENANCE OF ALL EROSION AND SEDIMENT CONTROL MEASURES MUST BE PROVIDED BY THE DEVELOPER. INSPECTIONS SHOULD OCCUR WEEKLY, AND AFTER ANY RAINFALL GREATER THAN 1/2". ANY NON-FUNCTIONING SEDIMENT CONTROL MEASURES OR DAMAGED DEVICES THAT ARE FOUND DURING INSPECTION SHALL BE REPAIRED OR REPLACED IMMEDIATELY. THE DEVELOPER SHALL BE RESPONSIBLE FOR ANY SEDIMENT WHICH LEAVES THE PROPERTY, AND THE DEVELOPER IS ALSO RESPONSIBLE FOR MAINTENANCE OF ALL SEDIMENT CONTROL MEASURES UNTIL THE SITE IS PERMANENTLY STABILIZED.
6. ALL POINTS OF CONSTRUCTION INGRESS AND EGRESS SHALL BE MADE ACROSS THE STABILIZED CONSTRUCTION ENTRANCE AND SHALL BE UTILIZED TO PREVENT TRACKING OF DEBRIS, DIRT, AND MUD ONTO ADJACENT STREETS, PARKING LOTS, OR PROPERTIES. ANY DEBRIS, DIRT, OR MUD THAT REACHES AN IMPROVED PUBLIC RIGHT-OF-WAY, STREET, OR PARKING AREA SHALL BE PROMPTLY REMOVED (BEFORE THE END OF EACH WORK DAY), AND TRANSPORTED TO A PROPER DISPOSAL AREA.
7. ALL SEDIMENT MUST BE PREVENTED FROM ENTERING ANY PUBLIC OR PRIVATE STORM DRAINAGE SYSTEM. REUSABLE INLET FILTER BASKETS (FLEXSTORM, CATCHALL, OR EQUIVALENT), SEDIMENT BASINS, AND WATER FILTERING BAGS,SHALL BE PROVIDED AS NEEDED.
8. ALL DRAINAGE SWALES SHALL BE STABILIZED WITH SPECIFIED EROSION CONTROL BLANKET.
9. TOPSOIL STOCKPILES SHALL BE LOCATED TO AVOID EROSION OF STOCKPILE ONTO NEIGHBORING PROPERTIES OR INTO RESTORED PROJECT AREAS. STOCKPILES SHALL BE LOCATED SO THAT A DRAINAGE SWALE IS LOCATED BETWEEN THE STOCKPILE AND ANY DOWNSTREAM PROPERTIES AND SHALL NOT BE LOCATED WITHIN ANY DRAINAGEWAYS, FLOOD PLAINS, WETLANDS OR LOCALIZED POOR DRAINAGE AREAS. IF A STOCKPILE IS TO REMAIN IN PLACE FOR MORE THAN 3 DAYS, IT MUST BE SEEDED AND BLANKETED TO MINIMIZE SOIL EROSION BY BOTH WIND AND WATER. REFER TO DETAIL ON SHEET C-15.
10. THE SURFACE OF STRIPPED AREAS SHALL BE PERMANENTLY OR TEMPORARY PROTECTED FROM SOIL EROSION WITHIN FIFTEEN DAYS AFTER FINAL GRADE IS REACHED. STRIPPED AREAS THAT WILL REMAIN UNDISTURBED FOR MORE THAN FIFTEEN DAYS AFTER INITIAL DISTURBANCE SHALL BE PROTECTED FROM EROSION.
11. THE DEVELOPER IS RESPONSIBLE FOR OBTAINING A SEPARATE NATIONAL POLLUTION DISCHARGE ELIMINATION SYSTEM (NPDES) PERMIT FROM THE ILLINOIS ENVIRONMENTAL PROTECTION AGENCY WHENEVER 1 ACRE OR MORE OF PROPERTY IS DISTURBED. FOR DEVELOPMENTS OVER 1 ACRE, THE DEVELOPER MUST ALSO PREPARE AND MAINTAIN A STORM WATER POLLUTION PREVENTION PLAN (SWPPP) AT THE PROJECT SITE, ALONG WITH THE NPDES PERMIT. FOR DEVELOPMENTS LESS THAN 1 ACRE, A SEDIMENT AND EROSION CONTROL PLAN MUST BE MAINTAINED BY THE DEVELOPER.
12. IF DEWATERING SERVICES ARE USED, OR IF THE VOLUME, VELOCITY, SEDIMENT LOAD, OR PEAK FLOW RATES OF STORMWATER RUNOFF ARE TEMPORARILY INCREASED DURING CONSTRUCTION, ADJACENT PROPERTIES AND DISCHARGE LOCATIONS SHALL BE PROTECTED FROM EROSION. DISCHARGES FROM CONSTRUCTION DEWATERING SHALL BE ROUTED THROUGH AN EFFECTIVE SEDIMENT CONTROL MEASURE SUCH AS A SEDIMENT TRAP, A SEDIMENT BASIN, OR ANY OTHER APPROPRIATE MEASURE.
13. ALL TEMPORARY EROSION AND SEDIMENT CONTROL MEASURES SHALL BE REMOVED WITHIN THIRTY (30) DAYS AFTER FINAL STABILIZATION IS ACHIEVED. TRAPPED SEDIMENT AND OTHER DISTURBED SOILS RESULTING FROM TEMPORARY MEASURES SHALL BE PROPERTY DISPOSED OF PRIOR TO PERMANENT STABILIZATION.
14. DURING CONSTRUCTION, CONTRACTOR SHALL PLUG RELEASE PIPE OF THE UNDERGROUND STORM WATER DETENTION SYSTEM AND DE WATER UNDERGROUND STORM WATER DETENTION AREA TO WEST BASIN. CONTRACTOR SHALL FLUSH UNDERGROUND DETENTION SYSTEM PRIOR TO GOING LIVE.

EROSION CONTROL LEGEND

	SEED & BLANKET NORTH AMERICAN GREEN S-75BN BLANKET (SEE LANDSCAPE PLAN FOR SEED MIX)
	INLET PROTECTION
—SF—	SILT FENCE

NORTH

GRAPHICAL SCALE (FEET)

0 1" = 40' 80'

PLAN I DESIGN I DELIVER
www.pinnacle-engr.com
PINNACLE ENGINEERING GROUP
ENGINEERING I NATURAL RESOURCES I SURVEYING
IL Design Firm 184.006289-0010
CHICAGO OFFICE:
1051 E. MAIN ST. | SUITE 217
EAST DUNDEE, IL 60118
(847) 551-5300
CHICAGO I MILWAUKEE : NATIONWIDE

NORTHWEST GATEWAY CENTER
1400-1500 WEST DUNDEE ROAD
ARLINGTON HEIGHTS, ILLINOIS

REVISIONS

SITE STABILIZATION PLAN

PEG JOB No. 283.00-IL
PEG PM BDJ
START DATE 04/09/21
SCALE 1"=40'

SHEET C-20 OF C-28

SITE STABILIZATION PLAN

DRAFTED: MSL DESIGNED: JKB REVIEWED: BDJ

8/9/2021 10:14 AM – Z:\Projects\2020\283.00-IL\12 – ENGINEERING\FINAL\SHEETSET\C-7 SITE STABILIZATION

DRAFTED: MSL DESIGNED: JKB REVIEWED: BDJ 8/9/2021 10:15 AM - Z:\Projects\2020\2283.00-IL\312 - ENGINEERING\FINAL\SHEETS\C-7 SITE STABILIZATION

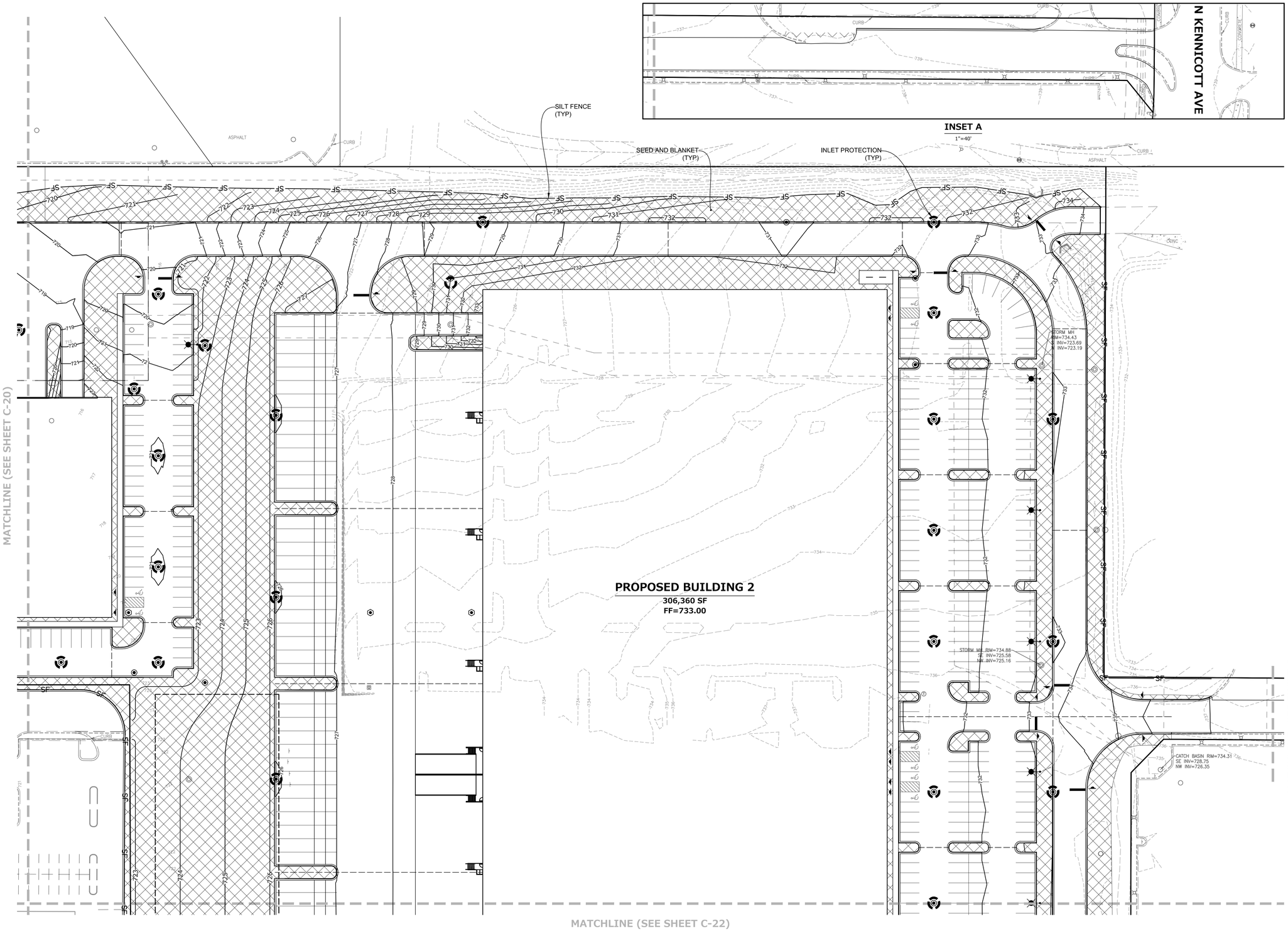

KEYMAP

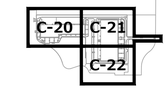

SITE STABILIZATION NOTES

1. AN INITIAL SEDIMENTATION AND EROSION CONTROL INSPECTION IS REQUIRED PRIOR TO STARTING CONSTRUCTION. CONTRACTOR SHALL CONTACT THE COMMUNITY DEVELOPMENT DEPARTMENT AT 630-434-5529 TO SCHEDULE THIS INSPECTION; THIS NOTIFICATION SHALL BE AT LEAST 24 HOURS IN ADVANCE OF CONSTRUCTION.
2. THE NOTICE OF INTENT (NOI) AND NPDES PERMIT SHALL BE OBTAINED PRIOR TO ANY EARTH MOVING ACTIVITIES.
3. ALL EROSION AND SEDIMENT CONTROL MEASURES ARE TO BE CONSTRUCTED AND MAINTAINED IN ACCORDANCE WITH THE ILLINOIS URBAN MANUAL, LATEST EDITION.
4. ALL EROSION AND SEDIMENT CONTROL MEASURES SHALL BE INSTALLED PRIOR TO THE START OF ANY CONSTRUCTION OR DISTURBANCE OF THE SITE. THE MEASURES MAY HAVE TO BE ADJUSTED TO MEET FIELD CONDITIONS DURING CONSTRUCTION. ANY MEASURES, IN ADDITION TO THOSE OUTLINED IN THE PLANS AND WHICH ARE DEEMED NECESSARY BY THE CITY, SHALL BE IMPLEMENTED IMMEDIATELY BY THE DEVELOPER. ALL TEMPORARY EROSION CONTROL MEASURES NECESSARY TO MEET THE REQUIREMENTS OF THE CITY OF PALATINE STORMWATER AND FLOOD PLAIN ORDINANCE SHALL BE KEPT OPERATIONAL AND MAINTAINED CONTINUOUSLY THROUGHOUT THE PERIOD OF LAND DISTURBANCE UNTIL PERMANENT SEDIMENT AND EROSION AND CONTROL MEASURES ARE OPERATIONAL.
5. REGULAR INSPECTION AND MAINTENANCE OF ALL EROSION AND SEDIMENT CONTROL MEASURES MUST BE PROVIDED BY THE DEVELOPER. INSPECTIONS SHOULD OCCUR WEEKLY, AND AFTER ANY RAINFALL GREATER THAN 1/2". ANY NON-FUNCTIONING SEDIMENT CONTROL MEASURES OR DAMAGED DEVICES THAT ARE FOUND DURING INSPECTION SHALL BE REPAIRED OR REPLACED IMMEDIATELY THE DEVELOPER SHALL BE RESPONSIBLE FOR ANY SEDIMENT WHICH LEAVES THE PROPERTY, AND THE DEVELOPER IS ALSO RESPONSIBLE FOR MAINTENANCE OF ALL SEDIMENT CONTROL MEASURES UNTIL THE SITE IS PERMANENTLY STABILIZED.
6. ALL POINTS OF CONSTRUCTION INGRESS AND EGRESS SHALL BE MADE ACROSS THE STABILIZED CONSTRUCTION ENTRANCE AND SHALL BE UTILIZED TO PREVENT TRACKING OF DEBRIS, DIRT, AND MUD ONTO ADJACENT STREETS, PARKING LOTS, OR PROPERTIES. ANY DEBRIS, DIRT, OR MUD THAT REACHES AN IMPROVED PUBLIC RIGHT-OF-WAY, STREET, OR PARKING AREA SHALL BE PROMPTLY REMOVED (BEFORE THE END OF EACH WORK DAY), AND TRANSPORTED TO A PROPER DISPOSAL AREA.
7. ALL SEDIMENT MUST BE PREVENTED FROM ENTERING ANY PUBLIC OR PRIVATE STORM DRAINAGE SYSTEM. REUSABLE INLET FILTER BASKETS (FLEXSTORM, CATCHALL, OR EQUIVALENT), SEDIMENT BASINS, AND WATER FILTERING BAGS,SHALL BE PROVIDED AS NEEDED.
8. ALL DRAINAGE SWALES SHALL BE STABILIZED WITH SPECIFIED EROSION CONTROL BLANKET.
9. TOPSOIL STOCKPILES SHALL BE LOCATED TO AVOID EROSION OF STOCKPILE ONTO NEIGHBORING PROPERTIES OR INTO RESTORED PROJECT AREAS. STOCKPILES SHALL BE LOCATED SO THAT A DRAINAGE SWALE IS LOCATED BETWEEN THE STOCKPILE AND ANY DOWNSTREAM PROPERTIES AND SHALL NOT BE LOCATED WITHIN ANY DRAINAGEWAYS, FLOOD PLAINS, WETLANDS OR LOCALIZED POOR DRAINAGE AREAS. IF A STOCKPILE IS TO REMAIN IN PLACE FOR MORE THAN 3 DAYS, IT MUST BE SEEDED AND BLANKETED TO MINIMIZE SOIL EROSION BY BOTH WIND AND WATER. REFER TO DETAIL ON SHEET C-15.
10. THE SURFACE OF STRIPPED AREAS SHALL BE PERMANENTLY OR TEMPORARY PROTECTED FROM SOIL EROSION WITHIN FIFTEEN DAYS AFTER FINAL GRADE IS REACHED. STRIPPED AREAS THAT WILL REMAIN UNDISTURBED FOR MORE THAN FIFTEEN DAYS AFTER INITIAL DISTURBANCE SHALL BE PROTECTED FROM EROSION.
11. THE DEVELOPER IS RESPONSIBLE FOR OBTAINING A SEPARATE NATIONAL POLLUTION DISCHARGE ELIMINATION SYSTEM (NPDES) PERMIT FROM THE ILLINOIS ENVIRONMENTAL PROTECTION AGENCY WHENEVER 1 ACRE OR MORE OF PROPERTY IS DISTURBED. FOR DEVELOPMENTS OVER 1 ACRE, THE DEVELOPER MUST ALSO PREPARE AND MAINTAIN A STORM WATER POLLUTION PREVENTION PLAN (SWPPP) AT THE PROJECT SITE, ALONG WITH THE NPDES PERMIT. FOR DEVELOPMENTS LESS THAN 1 ACRE, A SEDIMENT AND EROSION CONTROL PLAN MUST BE MAINTAINED BY THE DEVELOPER.
12. IF DEWATERING SERVICES ARE USED, OR IF THE VOLUME, VELOCITY, SEDIMENT LOAD, OR PEAK FLOW RATES OF STORMWATER RUNOFF ARE TEMPORARILY INCREASED DURING CONSTRUCTION, ADJACENT PROPERTIES AND DISCHARGE LOCATIONS SHALL BE PROTECTED FROM EROSION. DISCHARGES FROM CONSTRUCTION DEWATERING SHALL BE ROUTED THROUGH AN EFFECTIVE SEDIMENT CONTROL MEASURE SUCH AS A SEDIMENT TRAP, A SEDIMENT BASIN, OR ANY OTHER APPROPRIATE MEASURE.
13. ALL TEMPORARY EROSION AND SEDIMENT CONTROL MEASURES SHALL BE REMOVED WITHIN THIRTY (30) DAYS AFTER FINAL STABILIZATION IS ACHIEVED. TRAPPED SEDIMENT AND OTHER DISTURBED SOILS RESULTING FROM TEMPORARY MEASURES SHALL BE PROPERTY DISPOSED OF PRIOR TO PERMANENT STABILIZATION.
14. DURING CONSTRUCTION, CONTRACTOR SHALL PLUG RELEASE PIPE OF THE UNDERGROUND STORM WATER DETENTION SYSTEM AND DE WATER UNDERGROUND STORM WATER DETENTION AREA TO WEST BASIN. CONTRACTOR SHALL FLUSH UNDERGROUND DETENTION SYSTEM PRIOR TO GOING LIVE.

EROSION CONTROL LEGEND

	SEED & BLANKET NORTH AMERICAN GREEN S-75BN BLANKET (SEE LANDSCAPE PLAN FOR SEED MIX)
	INLET PROTECTION
—SF—	SILT FENCE

PLAN I DESIGN I DELIVER
www.pinnacle-engr.com
PINNACLE ENGINEERING GROUP
ENGINEERING I NATURAL RESOURCES I SURVEYING
CHICAGO OFFICE:
1051 E. MAIN ST. | SUITE 217
EAST DUNDEE, IL 60118
(847) 551-5300
CHICAGO I MILWAUKEE : NATIONWIDE
IL Design Firm 184.006289-0010

NORTHWEST GATEWAY CENTER
1400-1500 WEST DUNDEE ROAD
ARLINGTON HEIGHTS, ILLINOIS

REVISIONS

SITE STABILIZATION PLAN

PEG JOB No. 2283.00-IL
PEG PM BDJ
START DATE 04/09/21
SCALE 1"=40'

SHEET C-21 OF C-28

SITE STABILIZATION PLAN

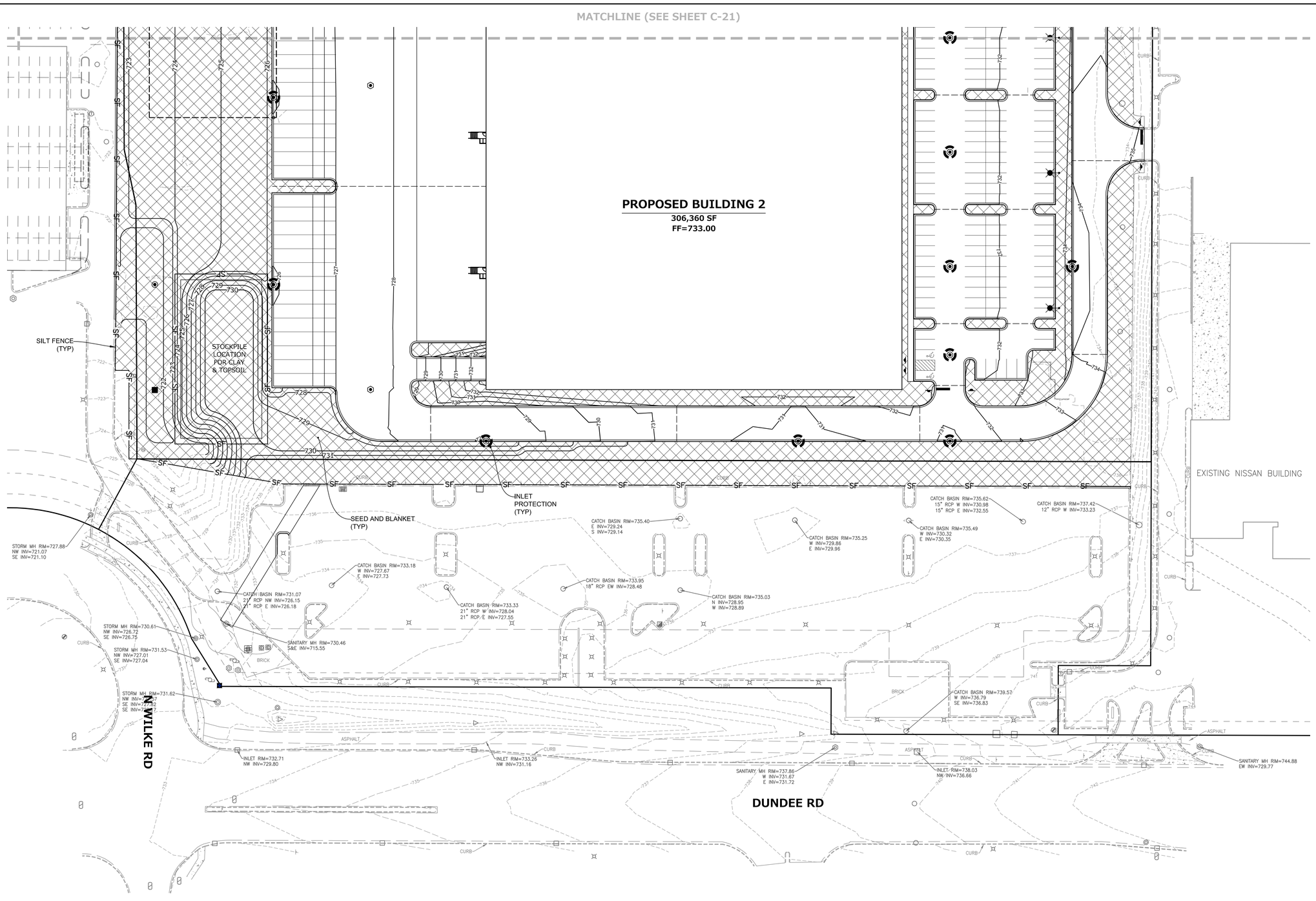

KEYMAP

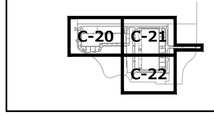

SITE STABILIZATION NOTES

1. AN INITIAL SEDIMENTATION AND EROSION CONTROL INSPECTION IS REQUIRED PRIOR TO STARTING CONSTRUCTION. CONTRACTOR SHALL CONTACT THE COMMUNITY DEVELOPMENT DEPARTMENT AT 630-434-5529 TO SCHEDULE THIS INSPECTION; THIS NOTIFICATION SHALL BE AT LEAST 24 HOURS IN ADVANCE OF CONSTRUCTION.
2. THE NOTICE OF INTENT (NOI) AND NPDES PERMIT SHALL BE OBTAINED PRIOR TO ANY EARTH MOVING ACTIVITIES.
3. ALL EROSION AND SEDIMENT CONTROL MEASURES ARE TO BE CONSTRUCTED AND MAINTAINED IN ACCORDANCE WITH THE ILLINOIS URBAN MANUAL, LATEST EDITION.
4. ALL EROSION AND SEDIMENT CONTROL MEASURES SHALL BE INSTALLED PRIOR TO THE START OF ANY CONSTRUCTION OR DISTURBANCE OF THE SITE. THE MEASURES MAY HAVE TO BE ADJUSTED TO MEET FIELD CONDITIONS DURING CONSTRUCTION. ANY MEASURES, IN ADDITION TO THOSE OUTLINED IN THE PLANS AND WHICH ARE DEEMED NECESSARY BY THE CITY, SHALL BE IMPLEMENTED IMMEDIATELY BY THE DEVELOPER. ALL TEMPORARY EROSION CONTROL MEASURES NECESSARY TO MEET THE REQUIREMENTS OF THE CITY OF PALATINE STORMWATER AND FLOOD PLAIN ORDINANCE SHALL BE KEPT OPERATIONAL AND MAINTAINED CONTINUOUSLY THROUGHOUT THE PERIOD OF LAND DISTURBANCE UNTIL PERMANENT SEDIMENT AND EROSION AND CONTROL MEASURES ARE OPERATIONAL.
5. REGULAR INSPECTION AND MAINTENANCE OF ALL EROSION AND SEDIMENT CONTROL MEASURES MUST BE PROVIDED BY THE DEVELOPER. INSPECTIONS SHOULD OCCUR WEEKLY, AND AFTER ANY RAINFALL GREATER THAN 1/2". ANY NON-FUNCTIONING SEDIMENT CONTROL MEASURES OR DAMAGED DEVICES THAT ARE FOUND DURING INSPECTION SHALL BE REPAIRED OR REPLACED IMMEDIATELY THE DEVELOPER SHALL BE RESPONSIBLE FOR ANY SEDIMENT WHICH LEAVES THE PROPERTY, AND THE DEVELOPER IS ALSO RESPONSIBLE FOR MAINTENANCE OF ALL SEDIMENT CONTROL MEASURES UNTIL THE SITE IS PERMANENTLY STABILIZED.
6. ALL POINTS OF CONSTRUCTION INGRESS AND EGRESS SHALL BE MADE ACROSS THE STABILIZED CONSTRUCTION ENTRANCE AND SHALL BE UTILIZED TO PREVENT TRACKING OF DEBRIS, DIRT, AND MUD ONTO ADJACENT STREETS, PARKING LOTS, OR PROPERTIES. ANY DEBRIS, DIRT, OR MUD THAT REACHES AN IMPROVED PUBLIC RIGHT-OF-WAY, STREET, OR PARKING AREA SHALL BE PROMPTLY REMOVED (BEFORE THE END OF EACH WORK DAY), AND TRANSPORTED TO A PROPER DISPOSAL AREA.
7. ALL SEDIMENT MUST BE PREVENTED FROM ENTERING ANY PUBLIC OR PRIVATE STORM DRAINAGE SYSTEM. REUSABLE INLET FILTER BASKETS (FLEXSTORM, CATCHALL, OR EQUIVALENT), SEDIMENT BASINS, AND WATER FILTERING BAGS,SHALL BE PROVIDED AS NEEDED.
8. ALL DRAINAGE SWALES SHALL BE STABILIZED WITH SPECIFIED EROSION CONTROL BLANKET.
9. TOPSOIL STOCKPILES SHALL BE LOCATED TO AVOID EROSION OF STOCKPILE ONTO NEIGHBORING PROPERTIES OR INTO RESTORED PROJECT AREAS. STOCKPILES SHALL BE LOCATED SO THAT A DRAINAGE SWALE IS LOCATED BETWEEN THE STOCKPILE AND ANY DOWNSTREAM PROPERTIES AND SHALL NOT BE LOCATED WITHIN ANY DRAINAGEWAYS, FLOOD PLAINS, WETLANDS OR LOCALIZED POOR DRAINAGE AREAS. IF A STOCKPILE IS TO REMAIN IN PLACE FOR MORE THAN 3 DAYS, IT MUST BE SEEDED AND BLANKETED TO MINIMIZE SOIL EROSION BY BOTH WIND AND WATER. REFER TO DETAIL ON SHEET C-15.
10. THE SURFACE OF STRIPPED AREAS SHALL BE PERMANENTLY OR TEMPORARY PROTECTED FROM SOIL EROSION WITHIN FIFTEEN DAYS AFTER FINAL GRADE IS REACHED. STRIPPED AREAS THAT WILL REMAIN UNDISTURBED FOR MORE THAN FIFTEEN DAYS AFTER INITIAL DISTURBANCE SHALL BE PROTECTED FROM EROSION.
11. THE DEVELOPER IS RESPONSIBLE FOR OBTAINING A SEPARATE NATIONAL POLLUTION DISCHARGE ELIMINATION SYSTEM (NPDES) PERMIT FROM THE ILLINOIS ENVIRONMENTAL PROTECTION AGENCY WHENEVER 1 ACRE OR MORE OF PROPERTY IS DISTURBED. FOR DEVELOPMENTS OVER 1 ACRE, THE DEVELOPER MUST ALSO PREPARE AND MAINTAIN A STORM WATER POLLUTION PREVENTION PLAN (SWPPP) AT THE PROJECT SITE, ALONG WITH THE NPDES PERMIT. FOR DEVELOPMENTS LESS THAN 1 ACRE, A SEDIMENT AND EROSION CONTROL PLAN MUST BE MAINTAINED BY THE DEVELOPER.
12. IF DEWATERING SERVICES ARE USED, OR IF THE VOLUME, VELOCITY, SEDIMENT LOAD, OR PEAK FLOW RATES OF STORMWATER RUNOFF ARE TEMPORARILY INCREASED DURING CONSTRUCTION, ADJACENT PROPERTIES AND DISCHARGE LOCATIONS SHALL BE PROTECTED FROM EROSION. DISCHARGES FROM CONSTRUCTION DEWATERING SHALL BE ROUTED THROUGH AN EFFECTIVE SEDIMENT CONTROL MEASURE SUCH AS A SEDIMENT TRAP, A SEDIMENT BASIN, OR ANY OTHER APPROPRIATE MEASURE.
13. ALL TEMPORARY EROSION AND SEDIMENT CONTROL MEASURES SHALL BE REMOVED WITHIN THIRTY (30) DAYS AFTER FINAL STABILIZATION IS ACHIEVED. TRAPPED SEDIMENT AND OTHER DISTURBED SOILS RESULTING FROM TEMPORARY MEASURES SHALL BE PROPERTY DISPOSED OF PRIOR TO PERMANENT STABILIZATION.
14. DURING CONSTRUCTION, CONTRACTOR SHALL PLUG RELEASE PIPE OF THE UNDERGROUND STORM WATER DETENTION SYSTEM AND DE WATER UNDERGROUND STORM WATER DETENTION AREA TO WEST BASIN. CONTRACTOR SHALL FLUSH UNDERGROUND DETENTION SYSTEM PRIOR TO GOING LIVE.

EROSION CONTROL LEGEND

- SEED & BLANKET — NORTH AMERICAN GREEN S-75BN BLANKET (SEE LANDSCAPE PLAN FOR SEED MIX)
- INLET PROTECTION
- —SF— SILT FENCE

NORTH

GRAPHICAL SCALE (FEET)

0 1" = 40' 80'

DRAFTED: MSL DESIGNED: JKB REVIEWED: BDJ 8/9/2021 10:15 AM Z:\Projects\2020\2283.00-IL\312 - ENGINEERING\FINAL\SHEETSET\C-7 SITE STABILIZATION

PLAN I DESIGN I DELIVER
www.pinnacle-engr.com
PINNACLE ENGINEERING GROUP
ENGINEERING I NATURAL RESOURCES I SURVEYING
IL Design Firm 184.006289-0010
CHICAGO OFFICE:
1051 E. MAIN ST. I SUITE 217
EAST DUNDEE, IL 60118
(847) 551-5300
CHICAGO I MILWAUKEE : NATIONWIDE

NORTHWEST GATEWAY CENTER
1400-1500 WEST DUNDEE ROAD
ARLINGTON HEIGHTS, ILLINOIS

REVISIONS

SITE STABILIZATION PLAN

PEG JOB No. 2283.00-IL
PEG PM BDJ
START DATE 04/09/21
SCALE 1"=40'

SHEET C-22 OF C-28

SITE STABILIZATION PLAN

SILT FENCE PLAN

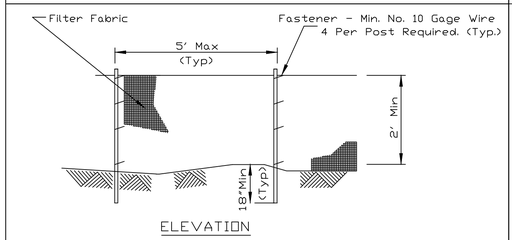

NOTES:
1. Temporary sediment fence shall be installed prior to any grading work in the area to be protected. They shall be maintained throughout the construction period and removed in conjunction with the final grading and site stabilization.
2. Filter fabric shall meet the requirements of material specification 592 Geotextile Table 1 or 2, Class I with equivalent opening size of at least 30 for nonwoven and 50 for woven.
3. Fence posts shall be either standard steel post or wood post with a minimum cross-sectional area of 3.0 sq. in.

REFERENCE
Project
Designed ____ Date ____
Checked ____ Date ____
Approved ____ Date ____

NRCS Natural Resources Conservation Service

STANDARD DWG. NO. IL-620
SHEET 1 OF 2
DATE 11-20-01

ROCK CHECK DAM – RIPRAP

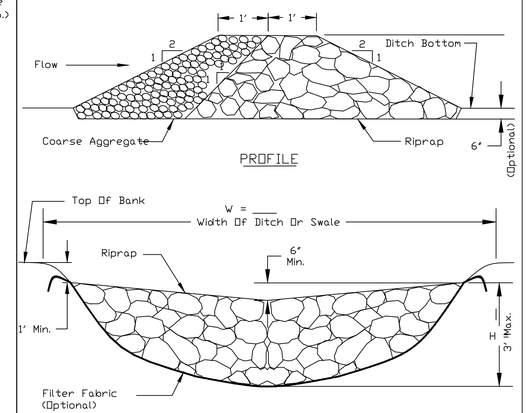

NOTES;
1. Filter fabric shall meet the requirements of material specification 592 GEOTEXTILE, Table 1 or 2, Class I, II, or IV and shall be placed over the cleared area prior to the placing of rock.
2. Coarse aggregate shall meet one of the following IDOT gradations, CA-1, CA-2, CA-3, or CA-4.
3. Riprap shall meet IDOT gradation RR-3 or RR-4 and meet Quality Designation A.
4. Coarse aggregate and riprap shall be placed according to construction specification 25 ROCKFILL using placement Method 1 and Class III compaction.
5. For added stability, the base of the dam may be keyed 6 inches into the soil.
6. See plans for spacing of dams and H dimensions.
7. Maximum drainage area to each dam is 10 acres.
8. ROCK CHECK DAM-COARSE AGGREGATE IL-605CA may be used for drainage areas under 2 acres.

REFERENCE
Project
Designed ____ Date ____
Checked ____ Date ____
Approved ____ Date

NRCS Natural Resources Conservation Service

STANDARD DWG. NO. IL-605R
SHEET 1 OF 1
DATE 1-29-99

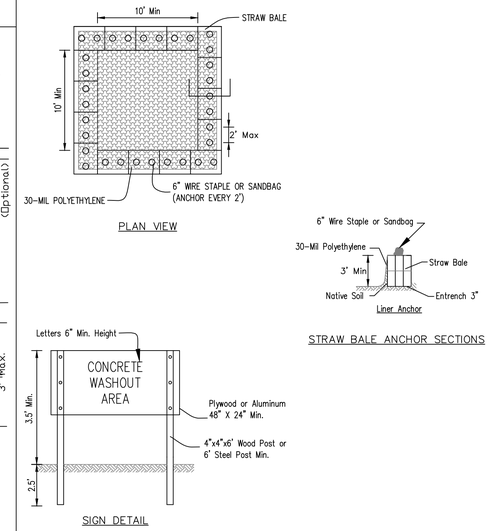

NOTES:
1. Maintaining temporary concrete washout facilities shall include removing and disposing of hardend concrete and/or slurry and returning the facilities to a functional condition.
2. Facility shall be cleaned or reconstructed in a new area once washout becomes two-thirds full.
3. Each straw bale is to be staked in place using (2) 2"x2"x4' wooden stakes.

Approved

TEMPORARY CONCRETE WASHOUT FACILITY – STRAW BALE

Designed ____ Date ____
Green B. JOHNSON ____ 6/08
Checked

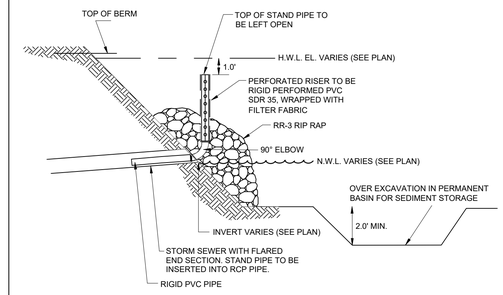

NOTES:
1. THE PERFORATED RISER IS TO BE PROVIDED AS PART OF THE SEDIMENT BASIN EROSION CONTROL MEASURES DURING CONSTRUCTION.
2. THE FILTER FABRIC SHALL BE SECURED TO THE PVC PERFORATED RISER WITH STRAPPING OR CONNECTING BANDS.
3. WHEN SEDIMENT BASIN IS NO LONGER REQUIRED, THE ENTIRE PERFORATED RISER ASSEMBLY IS TO BE REMOVED, AND REPLACED WITH R.C.P. AS INDICATED ABOVE. (SEE PLAN FOR SIZE)
4. PERFORATED PIPE SIZE TO BE $\frac{1}{3}$ THE SIZE OF THE OUTLET PIPE.

TEMPORARY PERFORATED RISER FOR WET BASINS

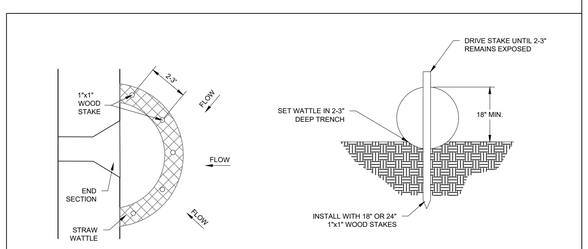

NOTES:
1. REMOVE ACCUMULATED SEDIMENT FROM THE FACE OF THE WATTLE WHEN THE SEDIMENT ACCUMULATION IS HALF THE HEIGHT OF THE WATTLE.
2. INSPECT AFTER EVERY RAINFALL EVENT.

PIPE INLET PROTECTION - STRAW WATTLE

INLET PROTECTION - STRAW WATTLE 6/9/2016

CULVERT DIAMETER	IDOT ROCK GRADATION	L_{apron} (ft.)	W_1 (ft.)	W_2 (ft.)	$t_{min.}$ (in.)	t_{bed} (in.) MATERIAL RR-1,2
12"	RR-3	10'	3'	11'	8"	—
15"	RR-3	14'	4.5'	15.5'	8"	—
24"	RR-3	16'	6'	18'	8"	—
30"	RR-3	18'	7.5'	20.5'	8"	—
36"	RR-4	20'	9'	23'	16"	6"
48"	RR-4	24'	12'	28'	16"	6"

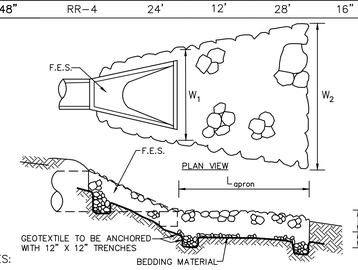

NOTES:
1. THE FILTER FABRIC SHALL MEET OR EXCEED THE REQUIREMENTS IN MATERIAL SPECIFICATIONS 592 GEOTEXTILE TABLE 1 OR 2, CLASS I, II, OR III.
2. THE ROCK RIPRAP SHALL MEET IDOT REQUIREMENTS AND SPECIFICATIONS.

RIP-RAP AT END SECTIONS

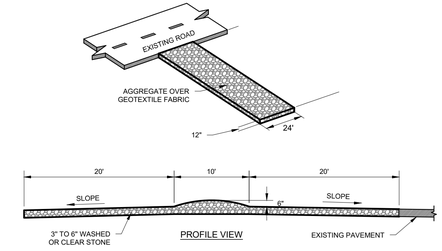

NOTES:
1. TRACKING PADS SHALL BE INSTALLED PRIOR TO ANY TRAFFIC LEAVING THE SITE. CONTRACTOR SHALL VERIFY LOCATION WITH OWNER.
2. THE AGGREGATE FOR TRACKING PADS SHALL MEET ONE OF THE FOLLOWING IDOT COARSE AGGREGATE GRADATIONS, CA-1, CA-2, CA-3, OR CA-4 AND BE PLACED ACCORDING TO CONSTRUCTION SPECIFICATIONS 25 ROCKFILL USING PLACEMENT METHOD 1 AND CLASS III COMPACTION.
3. THE AGGREGATE SHALL BE PLACED IN A LAYER AT LEAST 12-INCHES THICK. ON SITES WHERE SATURATED CONDITIONS ARE EXPECTED DURING THE LIFE OF THE PAD, THE PAD SHALL BE UNDERLAIN WITH GEOTEXTILE FABRIC WHICH MEETS MATERIAL SPECIFICATION 592 GEOTEXTILE, TABLE 1 OR 2, CLASS I, II OR IV, TO PREVENT MIGRATION OF UNDERLYING SOILS INTO THE STONE LAYER.
4. THE TRACKING PAD SHALL BE THE FULL WIDTH OF THE EGRESS POINT. MINIMUM WIDTH IS 14 FEET FOR ONE-WAY TRAFFIC AND 20 FEET FOR TWO-WAY TRAFFIC, WITH AN ADDITIONAL INCREASE OF 4 FEET FOR TRAILER TRAFFIC. THE TRACKING PAD SHALL BE A MINIMUM 50-FEET LONG.
5. ANY SEDIMENT TRACKED ONTO A PUBLIC OR PRIVATE ROAD SHOULD BE REMOVED BY STREET CLEANING, NOT FLUSHING, AT THE END OF EACH WORKING DAY.
6. TRACKING PADS SHALL, AT A MINIMUM, BE INSPECTED WEEKLY AND WITHIN 24-HOURS AFTER EVERY PRECIPITATION EVENT THAT PRODUCES 0.5-INCHES OF RAIN OR MORE DURING A 24-HOUR PERIOD.
7. THE TRACKING PAD PERFORMANCE SHALL BE MAINTAINED BY SCRAPING OR TOP-DRESSING WITH ADDITIONAL AGGREGATE.

CONSTRUCTION ENTRANCE

#108 10-02-12

Practice	Responsibility (Installation and maintenance): Grading Contractor	Underground Contractor	Paving Contractor	Landscape Contractor	Inspection (Inspector designated by Permittee): Every 7 days or within 24 hrs of a 0.5 in. rain event	After every storm	Immediately after a groundwater break	Daily during prolonged rainfall	Periodically	After every high water event	Timing: Prior to construction	Mass Grading	Detention Excavation	Underground Utility Installation	Paving	Final Stabilization	Maintenance
Stabilization																	
Erosion Blanket				X		X			X			X				X	Restaple displaced blankets
Filter Strip				X			X[1]		X[2]				X				Remove litter and sediment, repair erosion, reseed where needed, mow and water
Grass-Lined Channel				X		X[1]			X[2]			X					Removed sediment from channel and outlets (regrade and reseed if needed
Mulching	X			X		X			X			X					Reinstall after washouts and repair slope
Permanent Vegetation				X		X[1]			X[2]							X	Reseed if necessary, mowing, burning, fertilizer, pesticide
Sodding				X					X							X	Limit traffic, mow, fertilize, and water
Structural Streambank Stabilization	X									X		X					Check stream bank sections and repair as needed
Surface Roughening	X						X						X				
Temporary Seeding	X							z	X			X	X	X			Reseed areas of poor emergence
Polymer Stabilization	X					X						X				X	
Hydromulch	X			X		X						X				X	
Stormwater Management																	
Urban Stormwater Wetlands				X					X[4]				X				Clean sediment in forebay every 3–5 years, mow once per year
Rock Outlet Protection		X			X									X			Replace dislodged rocks
Subsurface Drain		X				X								X			Check drains, remove sediment and debris
Vegetated Swale				X		X[1]			X[2]			X					Limit traffic, mow, fertilize, and water
Open water Pond	X								X[4]				X				Clean sediment traps every 3–5 years, maintain surrounding vegetation
Structural Practice																	
Culvert Inlet Protection		X			X		X							X			Replace or clean aggregate, remove sediment
Diversion	X						X					X					Maintain capacity storage and ridge height
Diversion Dike	X				X							X					Maintain capacity storage and ridge height
Rock Check Dam	X				X						X	X					Remove sediment after it has accumulated over 1/2 dam height, replace dislodged rocks
Silt Fence	X				X			X			X						remove sediment when deposition is 1/2 fence height
Sump Pit	X	X							X		X	X	X	X			Replace if filter fabric and pit fill with sediment
Temporary Sediment Trap	X						X					X					Remove sediment when it has accumulated to 1/2 design depth of permanent pool, repair erosion damage.
Temporary Slope Drain	X				X							X					Make necessary repairs to drain and supporting structures, remove sediment
Temporary Stream Crossing	X				X		X					X					Make all necessary repairs to structure
Temporary Swale	X				X							X					Remove excessive sediment and debris, repair any bank failure, reseed poor emergence areas
Stockpile Protection	X				X							X					Repair silt fence or berm, add aggregate to vehicle access
Temporary Stand Pipe w/Filter Sock	X				X								X				Clean sock, remove deposits from perforations
Inlet Protection–Fabric		X			X									X			Remove sediment deposits, replace if damaged
Inlet Protection–Inlet Basket		X			X									X			Dump out sediment in designated stockpile
Turbidity Curtain	X				X				X			X					Repair fabric, remove sediment to restore original depth.
Temporary Silt Dike/Wattle	X				X							X					Replace entire system if fabric decomposes, remove sediment when deposition is 1/2 ditch height
Other Controls																	
Dust Control	X								X			X	X	X	X		Repeat treatment as needed
Stabilized Construction Entrance	X				X						X						Add top dressing of aggregate when dirty
Truck Wash Rack	X								X		X						Clean out wash area, maintain inlets
Tree Protection	X								X[2]		X						Repair fencing and signs, note tree damage
Concrete Wash Out			X						X						X		Remove concrete and dispose of in designated locations
Construction Road Stabilization	X				X							X					Periodically add top dressing of aggregate, maintain adjacent roads
Floc Log Application	X[4]				X				X		X	X	X				Replace floc logs when efficacy loss begins

Inspection Notes:

X1–during growth
X2–when established
X3–every spring until the second year
X4–during 1st year
X5–seasonally
X6–2 times per year
X7–every 7 days during construction
X8–Inspections should be overseen by a CPESC or similar

PLAN I DESIGN I DELIVER
www.pinnacle-engr.com
PINNACLE ENGINEERING GROUP
ENGINEERING I NATURAL RESOURCES I SURVEYING
IL Design Firm 184.006289-0010
CHICAGO OFFICE:
1051 E. MAIN ST. | SUITE 217
EAST DUNDEE, IL 60118
(847) 551-5300
CHICAGO I MILWAUKEE : NATIONWIDE

NORTHWEST GATEWAY CENTER
1400-1500 WEST DUNDEE ROAD
ARLINGTON HEIGHTS, ILLINOIS

REVISIONS

1	VILLAGE COMMENTS	5/21/21	
2	VILLAGE COMMENTS	7/7/21	
3	VILLAGE COMMENTS	8/6/21	

CONSTRUCTION STANDARDS

PEG JOB No. 2283.00-IL
PEG PM BDJ
START DATE 04/09/21
SCALE

SHEET C-23 OF C-28

CONSTRUCTION STANDARDS

DRAFTED: MSL DESIGNED: JKB REVIEWED: BDJ

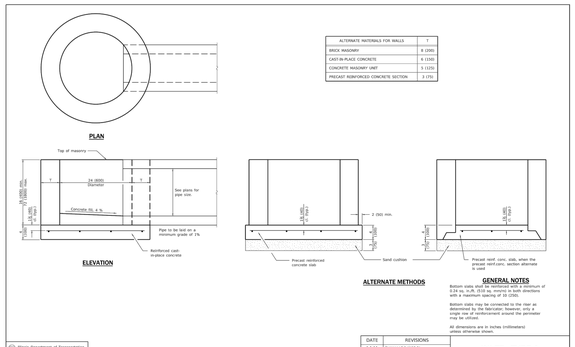

ALTERNATE MATERIALS FOR WALLS	T
BRICK MASONRY	8 (200)
CAST-IN-PLACE CONCRETE	6 (150)
CONCRETE MASONRY UNIT	5 (125)
PRECAST REINFORCED CONCRETE SECTION	3 (75)

ALTERNATE METHODS

GENERAL NOTES

Bottom slabs may be constructed to the riser as determined by the fabricator, however, only a minimum of 3.25 sq. in./ft. (2.5 sq. in.) of reinforcement around the perimeter may be utilized.

All dimensions are in inches (millimeters) unless otherwise shown.

Illinois Department of Transportation

DATE	REVISIONS
1-1-14	Increased height to 72 (1800) maximum.
1-1-11	Detailed rein. in slabs. Added max. limit to height. Added general notes.

INLET - TYPE A

STANDARD 602301-04

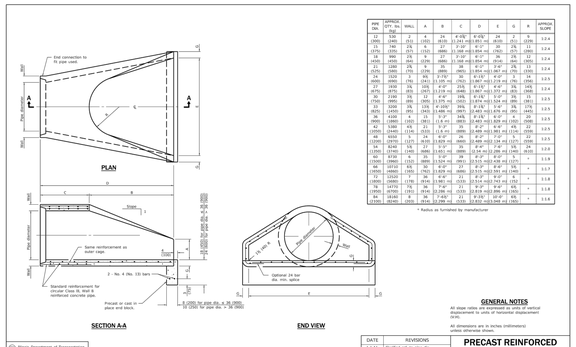

PIPE DIA.	APPROX. WT. PER PIPE	WALL	A	B	C	D	E	F	G	H	APPROX. SLOPE
12 (300)	540 (240)	2 (51)	4 (102)	24 (610)	4'-4½" (1.32 m)	4'-4½" (1.32 m)	1'-8½" (511)	2'-1 (635)	1'-2 (305)	1'-2 (305)	1:2.4
15 (375)	750 (335)	2½ (57)	4½ (114)	27 (686)	5'-0½" (1.54 m)	5'-0½" (1.54 m)	2'-0½" (616)	2'-3 (686)	1'-3 (381)	1'-3 (381)	1:2.4
18 (450)	990 (450)	2½ (57)	5 (127)	30 (762)	5'-8½" (1.74 m)	5'-8½" (1.74 m)	2'-3½" (692)	2'-6 (762)	1'-4 (406)	1'-4 (406)	1:2.4
21 (525)	1285 (580)	2½ (57)	5½ (140)	33 (838)	6'-0½" (1.84 m)	6'-0½" (1.84 m)	2'-6½" (768)	2'-9 (838)	1'-5 (432)	1'-5 (432)	1:2.4
24 (600)	1600 (725)	2½ (57)	6 (152)	36 (914)	6'-4½" (1.94 m)	6'-4½" (1.94 m)	2'-9½" (845)	3'-0 (914)	1'-6 (457)	1'-6 (457)	1:2.4
27 (675)	1930 (875)	2½ (57)	6½ (165)	39 (991)	6'-8½" (2.03 m)	6'-8½" (2.03 m)	3'-0½" (921)	3'-3 (991)	1'-7 (483)	1'-7 (483)	1:2.4
30 (750)	2300 (1040)	2½ (57)	7 (178)	42 (1067)	7'-0½" (2.13 m)	7'-0½" (2.13 m)	3'-3½" (997)	3'-6 (1067)	1'-8 (508)	1'-8 (508)	1:2.5
33 (825)	2690 (1220)	2½ (57)	7½ (191)	45 (1143)	7'-4½" (2.24 m)	7'-4½" (2.24 m)	3'-6½" (1073)	3'-9 (1143)	1'-9 (533)	1'-9 (533)	1:2.5
36 (900)	3100 (1405)	2½ (57)	8 (203)	48 (1219)	7'-8½" (2.34 m)	7'-8½" (2.34 m)	3'-9½" (1149)	4'-0 (1219)	2'-0 (610)	2'-0 (610)	1:2.5
42 (1050)	4000 (1815)	3 (76)	9 (229)	54 (1372)	8'-4½" (2.54 m)	8'-4½" (2.54 m)	4'-0½" (1225)	4'-3 (1372)	2'-2 (660)	2'-2 (660)	1:2.5
48 (1200)	5100 (2310)	3½ (89)	10½ (267)	60 (1524)	9'-0½" (2.74 m)	9'-0½" (2.74 m)	4'-4½" (1327)	4'-6 (1524)	2'-4 (711)	2'-4 (711)	1:2.5
54 (1350)	6300 (2860)	4 (102)	11 (279)	66 (1676)	9'-8½" (2.94 m)	9'-8½" (2.94 m)	4'-8½" (1429)	4'-9 (1676)	2'-6 (762)	2'-6 (762)	1:2.5
60 (1500)	7800 (3540)	4½ (114)	12 (305)	72 (1829)	10'-0½" (3.05 m)	10'-0½" (3.05 m)	5'-0½" (1530)	5'-0 (1829)	2'-8 (813)	2'-8 (813)	1:2.5
66 (1650)	9300 (4220)	5 (127)	13½ (343)	78 (1981)	10'-8½" (3.25 m)	10'-8½" (3.25 m)	5'-4½" (1632)	5'-6 (1981)	2'-10 (864)	2'-10 (864)	1:2.5
72 (1800)	11000 (4990)	5½ (140)	14½ (368)	84 (2134)	11'-0½" (3.35 m)	11'-0½" (3.35 m)	5'-6½" (1683)	6'-0 (2134)	3'-0 (914)	3'-0 (914)	1:2.5
84 (2100)	14000 (6350)	6 (152)	16 (406)	96 (2438)	12'-0½" (3.65 m)	12'-0½" (3.65 m)	6'-0½" (1835)	6'-9 (2438)	3'-4 (1016)	3'-4 (1016)	1:2.5
96 (2400)	17000 (7710)	6½ (165)	18½ (470)	108 (2743)	13'-0½" (3.95 m)	13'-0½" (3.95 m)	6'-6½" (1937)	7'-3 (2743)	3'-8 (1118)	3'-8 (1118)	1:2.5
108 (2700)	20500 (9300)	7 (178)	19½ (495)	120 (3048)	13'-8½" (4.16 m)	13'-8½" (4.16 m)	7'-0½" (2038)	7'-9 (3048)	4'-0 (1219)	4'-0 (1219)	1:2.5

* Radius as furnished by manufacturer

GENERAL NOTES

All slope ratios are expressed as units of vertical displacement to units of horizontal displacement (rise:run).

All dimensions are in inches (millimeters) unless otherwise shown.

Illinois Department of Transportation

DATE	REVISIONS
1-1-11	Clarified rel. to pipe dia. in Section A-A. Changed "inner" to "outer" cage rel.
1-1-09	Switched units to English (metric).

PRECAST REINFORCED CONCRETE FLARED END SECTION

STANDARD 542301-03

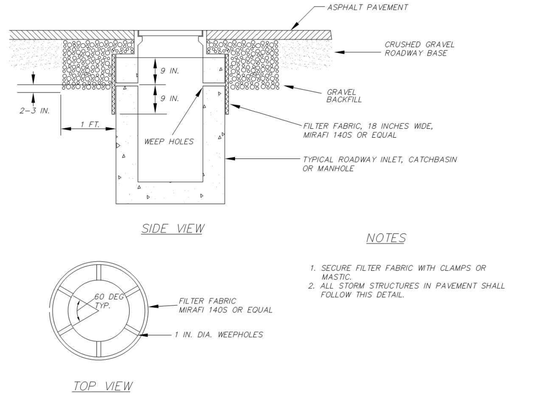

NOTES

1. SECURE FILTER FABRIC WITH CLAMPS OR MASTIC.
2. ALL STORM STRUCTURES IN PAVEMENT SHALL FOLLOW THIS DETAIL.

WEEPHOLE DETAIL

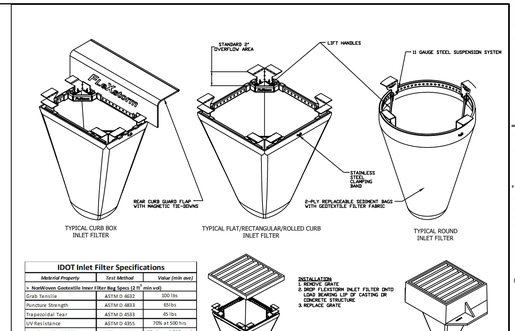

IDOT Inlet Filter Specifications		
Material Property	*Test Method*	*Value (min ave)*
> NonWoven Geotextile Inner Filter Bag Specs (2 ft² min val)		
Grab Tensile	ASTM D 4632	300 lbs
Puncture Strength	ASTM D 4833	60 lbs
Trapezoidal Tear	ASTM D 4533	45 lbs
UV Resistance	ASTM D 4355	70% at 500 hrs
App Open Size (AOS)	ASTM D 4751	70 US sieve (.212 mm)
Permittivity	ASTM D 4491	2.0 sec
Water Flow Rate	ASTM D 4491	145 gpm/ft/sf
> Polyester Outer Reinforcement Bag Specifications		
Weight	ASTM D 3776	6.50 oz/yd (+/- 15%
Thickness	ASTM D 1777	.040 +/- .005
> Frame Construction		
A36 Structural Steel; 11 Gauge; Zinc Plated	ASTM A 576	*tensile Strength > 58,000 psi; Yield Strength > 36,000 psi*

INSTALLATION
1. REMOVE GRATE
2. DROP FLEXSTORM INLET FILTER INTO LIKE BLANKET LIP OF CASTING ON CONCRETE STRUCTURE
3. REPLACE GRATE

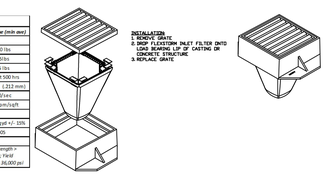

INLET PROTECTION

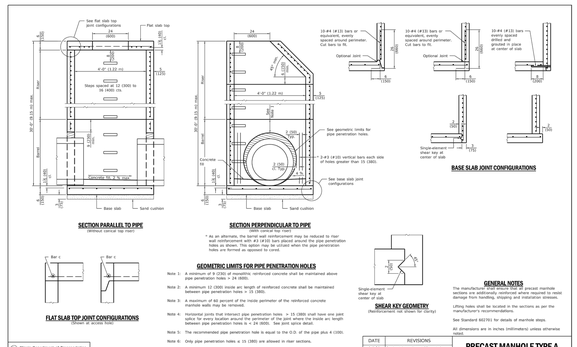

GENERAL NOTES

The manufacturer shall ensure that all precast manhole sections are additionally reinforced where required to resist damage from handling, shipping and installation stresses.

Lifting holes shall be located in the sections as per the manufacturer's recommendations.

See Standard 602701 for details of manhole steps.

All dimensions are in inches (millimeters) unless otherwise noted.

Illinois Department of Transportation

DATE	REVISIONS
1-1-11	Revised Note 1 and lifting hole general note.
5-1-14	Moved wall reinforcement from inside face to middle.

PRECAST MANHOLE TYPE A 4' (1.22 m) DIAMETER

(Sheet 1 of 2)

STANDARD 602401-07

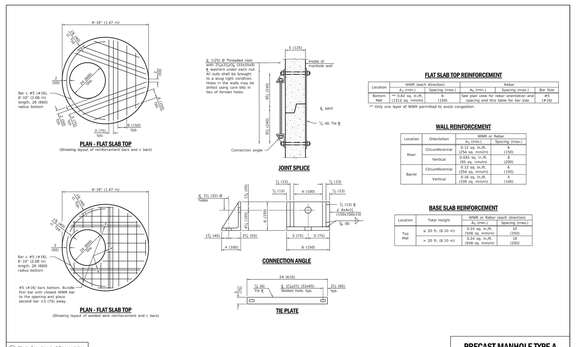

FLAT SLAB TOP REINFORCEMENT

Location	WWR (each direction)		Rebar	
	A_s (min.)	Spacing (max.)	A_s (min.)	Spacing (max.)	Bar Size
Bottom (typ)	* 0.60 sq. in./ft. (379 sq. mm/m)	6 (150)	See plan view for rebar orientation and spacing and this table for bar size.		#5 (#16)

* Only one layer of WWR permitted to avoid congestion.

WALL REINFORCEMENT

Location	Orientation	WWR in Rebar	
		A_s (min.)	Spacing (max.)
Riser	Circumferential	0.12 sq. in./ft. (254 sq. mm/m)	6 (150)
	Vertical	0.12 sq. in./ft. (381 sq. mm/m)	6 (150)
Barrel	Circumferential	0.12 sq. in./ft. (254 sq. mm/m)	6 (150)
	Vertical	0.18 sq. in./ft. (330 sq. mm/m)	6 (150)

BASE SLAB REINFORCEMENT

Location	Total Height	WWR in Rebar (each direction)	
		A_s (min.)	Spacing (max.)
Top Mat	≤ 20 ft. (6.10 m)	0.18 sq. in./ft. (381 sq. mm/m)	12 (300)
	> 20 ft. (6.10 m)	0.24 sq. in./ft. (508 sq. mm/m)	12 (300)
Bottom Mat	All	0.12 sq. in./ft. (254 sq. mm/m)	12 (300)

Illinois Department of Transportation

PRECAST MANHOLE TYPE A 4' (1.22 m) DIAMETER

(Sheet 2 of 2)

STANDARD 602401-07

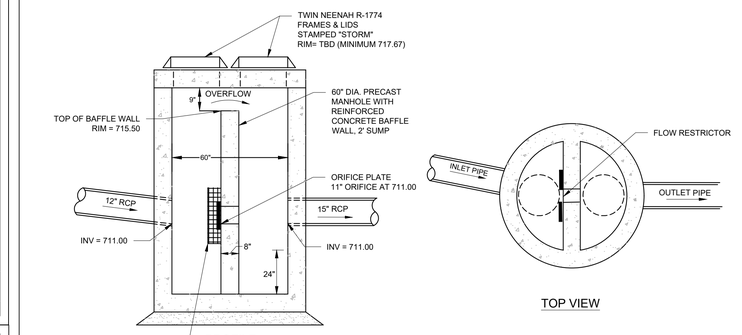

NOTES:
1. HYDRAULIC CEMENT FOR GROUTING. 1/4" X 12" X12" GALVANIZED STEEL ORIFICE PLATE CENTERED ON 11" HOLE IN BAFFLE WALL.
2. 4-3/8" EXPANSION ANCHORS, LUG BOLT, LUG SHIELD TYPE EMBEDDED IN WALL 1 3/4" W/ WASHERS AND HEX NUTS, TACK WELD NUTS SEAL PLATE AT WALL WITH SILICONE SEALANT.

WEST BASIN OUTLET CONTROL STRUCTURE DETAIL

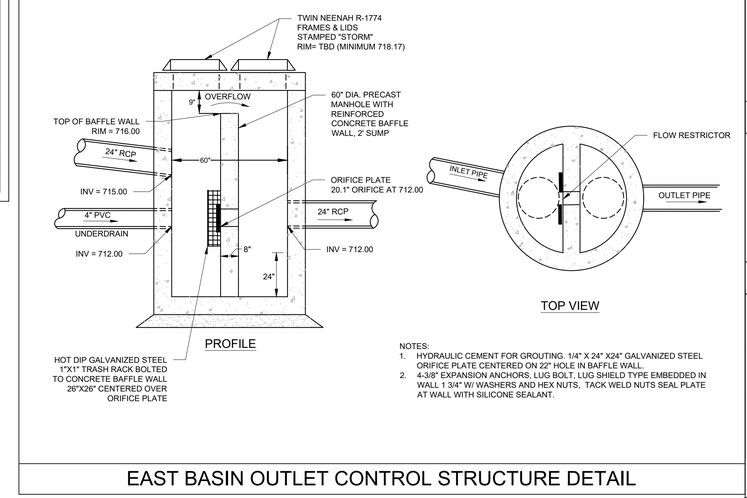

NOTES:
1. HYDRAULIC CEMENT FOR GROUTING. 1/4" X 24" X24" GALVANIZED STEEL ORIFICE PLATE CENTERED ON 22" HOLE IN BAFFLE WALL.
2. 4-3/8" EXPANSION ANCHORS, LUG BOLT, LUG SHIELD TYPE EMBEDDED IN WALL 1 3/4" W/ WASHERS AND HEX NUTS, TACK WELD NUTS SEAL PLATE AT WALL WITH SILICONE SEALANT.

EAST BASIN OUTLET CONTROL STRUCTURE DETAIL

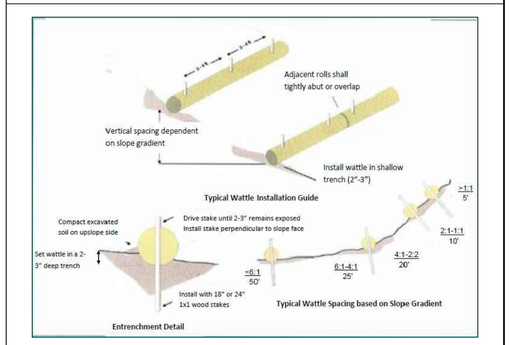

TYPICAL STRAW WATTLE

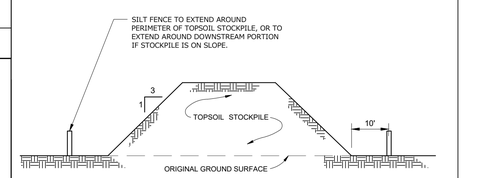

TEMPORARY TOPSOIL STOCKPILE

STABILIZATION EFFECTIVENESS (TIME OF YEAR)

STABILIZATION TYPE	STABILIZATION UTILIZATION PERIODS										
	JAN.	FEB.	MAR.	APR.	MAY	JUNE	JULY	AUG.	SEPT.	OCT.	NOV.	DEC.
PERMANENT SEEDING			A	*	*	*	*	*	*			
DORMANT SEEDING	B										B	
TEMPORARY SEEDING			C	*	*	*	D	*	*	*		
SODDING			E	*	*	*	*	*	*	*		

STABILIZATION EFFECTIVENESS

1. PREPARE SWPPP AND ACQUIRE NPDES AND OTHER PERTINENT PERMITS. UPDATE SWPPP AS NECESSARY THROUGHOUT CONSTRUCTION UNTIL FINAL STABILIZATION.
2. CONDUCT EROSION AND SEDIMENT CONTROL PRECONSTRUCTION MEETING WITH APPROPRIATE AGENCIES AND CONTRACTORS.
3. INSTALL STABILIZED CONSTRUCTION ENTRANCE.
4. INSTALL PERIMETER SEDIMENT CONTROL MEASURES.
5. INSTALL PROTECTION FOR EXISTING INLET AND OUTLET STRUCTURES, IF NECESSARY.
6. BEGIN SEDIMENT AND EROSION CONTROL OBSERVATIONS ON A WEEKLY BASIS, AS WELL AS AFTER EVERY ½" PRECIPITATION EVENT.
7. REMOVE EXISTING VEGETATION AS NEEDED FOR GRADING. VEGETATION SHOULD REMAIN IN AREAS THAT WILL NOT UNDERGO INITIAL GRADING.
8. EXCAVATE DETENTION PONDS AND TEMPORARY SEDIMENT TRAPS AND BASINS.
9. SEED AND BLANKET DETENTION PONDS; INSTALL SILT FENCE AROUND TOPS OF SLOPE.
10. CONDUCT SITE GRADING, INCLUDING STABILIZATION OF ALL STEEP SLOPES, DRAINAGE CHANNELS, AND ALL DISTURBED AREAS AS THEY ARE COMPLETED; I.E. SEED, BLANKET.
11. STABILIZE TOPSOIL STOCKPILES WITH PERIMETER PROTECTION AND TEMPORARY SEED IF NOT IN USE FOR OVER 14 DAYS.
12. CONDUCT ROAD AND CURB INSTALLATION; CONDUCT CONCRETE WASHOUT INSTALLATION IMPLEMENT STREET CLEANING PROGRAM.
13. CONDUCT BUILDING CONSTRUCTION AND PERMANENT SEEDING AS AREAS ARE COMPLETED.
16. SUBMIT NOTICE OF TERMINATION (NOT) AFTER SITE CONSTRUCTION IS COMPLETE AND ALL AREAS ARE FINALLY STABILIZED WITH OVER 70% VEGETATIVE COVER REMOVE TEMPORARY EROSION AND SEDIMENT CONTROL MEASURES.

SOIL EROSION AND SEDIMENT CONTROL

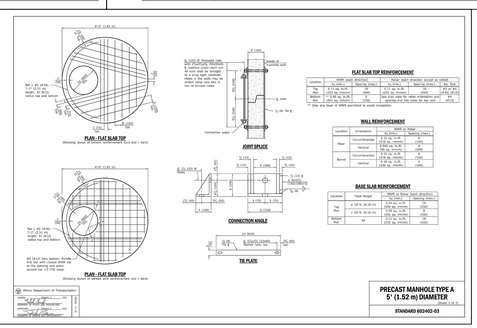

FLAT SLAB TOP REINFORCEMENT

Location	WWR (each direction)		Rebar (each direction except as noted)		
	A_s (min.)	Spacing (max.)	A_s (min.)	Spacing (max.)	Bar Size
Top (typ)	0.12 sq. in./ft. (254 sq. mm/m)	6 (150)	See plan view for rebar orientation and spacing and this table for bar size.		#5 (#16)
Bottom (typ)	* 0.60 sq. in./ft. (379 sq. mm/m)	6 (150)	See plan view for rebar orientation and spacing and this table for bar size.		#5 (#16)

* Only one layer of WWR permitted to avoid congestion.

WALL REINFORCEMENT

Location	Orientation	WWR in Rebar	
		A_s (min.)	Spacing (max.)
Riser	Circumferential	0.12 sq. in./ft. (254 sq. mm/m)	6 (150)
	Vertical	0.12 sq. in./ft. (381 sq. mm/m)	6 (150)
Barrel	Circumferential	0.12 sq. in./ft. (254 sq. mm/m)	6 (150)
	Vertical	0.18 sq. in./ft. (330 sq. mm/m)	6 (150)

BASE SLAB REINFORCEMENT

Location	Total Height	WWR in Rebar (each direction)	
		A_s (min.)	Spacing (max.)
Top Mat	≤ 20 ft. (6.10 m)	0.18 sq. in./ft. (381 sq. mm/m)	12 (300)
	> 20 ft. (6.10 m)	0.24 sq. in./ft. (508 sq. mm/m)	12 (300)
Bottom Mat	All	0.12 sq. in./ft. (254 sq. mm/m)	12 (300)

Illinois Department of Transportation

PRECAST MANHOLE TYPE A 5' (1.52 m) DIAMETER

(Sheet 1 of 2)

STANDARD 602402-03

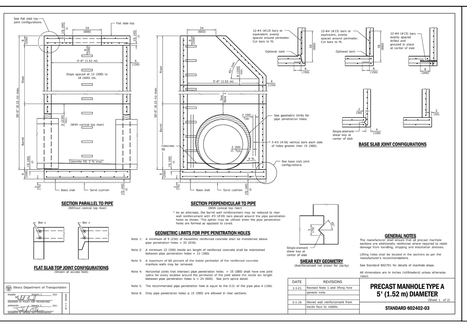

GENERAL NOTES

The manufacturer shall ensure that all precast manhole sections are additionally reinforced where required to resist damage from handling, shipping and installation stresses.

Lifting holes shall be located in the sections as per the manufacturer's recommendations.

See Standard 602701 for details of manhole steps.

All dimensions are in inches (millimeters) unless otherwise noted.

Illinois Department of Transportation

DATE	REVISIONS
1-1-11	Revised Note 1 and lifting hole general note.
5-1-14	Moved wall reinforcement from inside face to middle.

PRECAST MANHOLE TYPE A 5' (1.52 m) DIAMETER

(Sheet 1 of 2)

STANDARD 602402-03

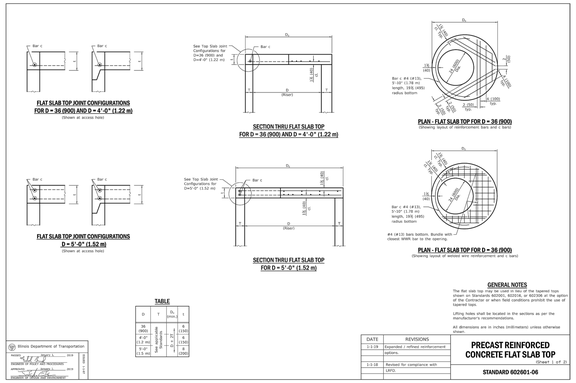

FLAT SLAB TOP REINFORCEMENT FOR D = 36 (900)

Location	WWR (each direction)		Rebar	
	A_s (min.)	Spacing (max.)	A_s (min.)	Spacing (max.)	Bar Size
Bottom (typ)	* 0.60 sq. in./ft. (379 sq. mm/m)	6 (150)	See plan view for rebar orientation and spacing and this table for bar size.		#5 (#16)

FLAT SLAB TOP REINFORCEMENT FOR D = 4'-0" (1.22 m)

Location	WWR (each direction)		Rebar	
	A_s (min.)	Spacing (max.)	A_s (min.)	Spacing (max.)	Bar Size
Bottom (typ)	* 0.60 sq. in./ft. (379 sq. mm/m)	6 (150)	See plan view for rebar orientation and spacing and this table for bar size.		#5 (#16)

FLAT SLAB TOP REINFORCEMENT FOR D = 5'-0" (1.52 m)

Location	WWR (each direction)		Rebar (each direction except as noted)		
	A_s (min.)	Spacing (max.)	A_s (min.)	Spacing (max.)	Bar Size
Top (typ)	0.12 sq. in./ft. (254 sq. mm/m)	6 (150)	See plan view for rebar orientation and spacing and this table for bar size.		#5 (#16)
Bottom (typ)	* 0.60 sq. in./ft. (387 sq. mm/m)	6 (150)	See plan view for rebar orientation and spacing and this table for bar size.		#4 (#13)

* Only one layer of WWR permitted to avoid congestion.

Illinois Department of Transportation

PRECAST REINFORCED CONCRETE FLAT SLAB TOP

(Sheet 1 of 2)

STANDARD 602601-06

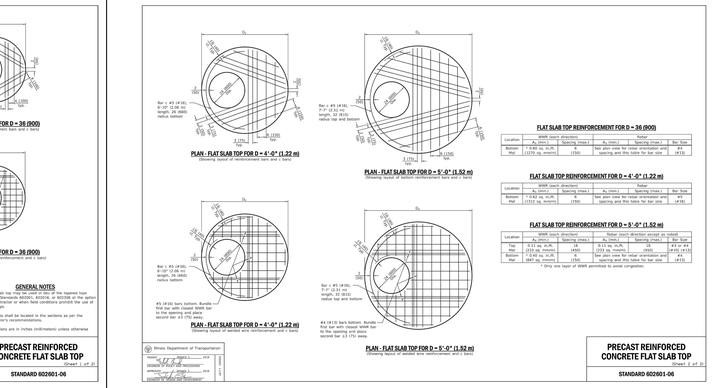

GENERAL NOTES

The flat slab top may also used in lieu of the tapered tops shown on Standards 602001, 602104, or 602106 at the option of the manufacturer or when field conditions prohibit the use of tapered tops.

Lifting holes shall be located in the sections as per the manufacturer's recommendations.

All dimensions are in inches (millimeters) unless otherwise shown.

Illinois Department of Transportation

DATE	REVISIONS
1-1-16	Expanded rolled reinforcement options.
1-1-10	Revised for compliance with LRFD.

PRECAST REINFORCED CONCRETE FLAT SLAB TOP

(Sheet 1 of 2)

STANDARD 602601-06

REVIEWED: BDJ

DESIGNED: JKB

DRAFTED: MSL

PLAN I DESIGN I DELIVER
www.pinnacle-engr.com

PINNACLE ENGINEERING GROUP
ENGINEERING I NATURAL RESOURCES I SURVEYING
IL Design Firm 184.006289-0010

CHICAGO OFFICE:
1051 E. MAIN ST. | SUITE 217
EAST DUNDEE, IL 60118
(847) 551-5300
CHICAGO I MILWAUKEE : NATIONWIDE

NORTHWEST GATEWAY CENTER
1400-1500 WEST DUNDEE ROAD
ARLINGTON HEIGHTS, ILLINOIS

REVISIONS

1	VILLAGE COMMENTS	5/21/21	
2	VILLAGE COMMENTS	7/7/21	
3	VILLAGE COMMENTS	8/6/21	

CONSTRUCTION STANDARDS

PEG JOB No: 2283.00-1L
PEG PM: BDJ
START DATE: 04/09/21
SCALE: _

SHEET C-24 OF C-28

CONSTRUCTION STANDARDS

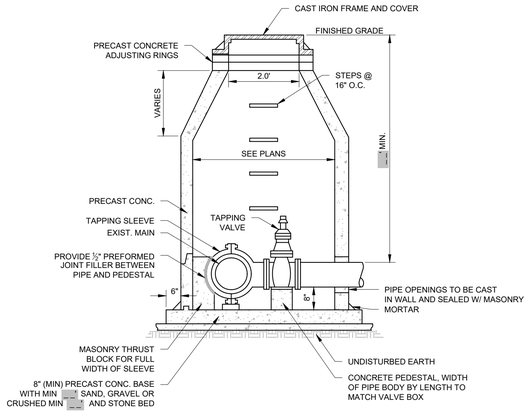

NOTES:

1. VALVE VAULT BARREL SECTIONS SHALL CONFORM TO ASTM SPECIFICATIONS

PRESSURE CONNECTION VALVE VAULT

#505 10-10-13

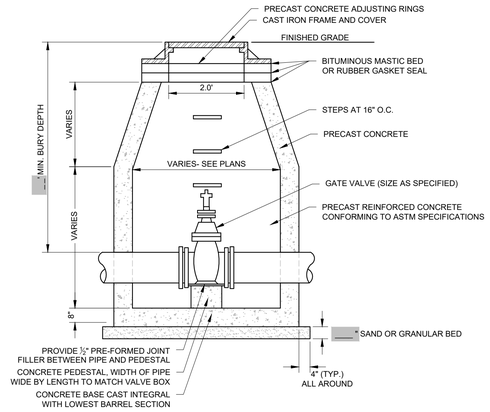

VALVE VAULT - TYPE A

#507 10-10-13

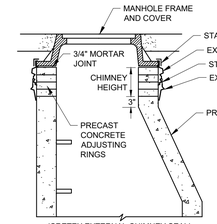

(CRETEX EXTERNAL CHIMNEY SEAL)

NARROW EXTERNAL RUBBER SEAL

TO SPAN CHIMNEY HEIGHTS OF:		
0"-3"	-	NARROW (6") SEAL ONLY
OVER 3"-6 ½"	-	STANDARD SEAL ONLY
OVER 6 ½"-13 ½"	-	STD. SEAL + EXTENSION
OVER 13 ½"	-	SEAL + MULTI. EXTENSIONS

MANHOLE FRAME - CHIMNEY SEALING SPECIFICATION

MANHOLE FRAME-CHIMNEY SEAL - AN EXTERNAL RUBBER SEAL, AS SPECIFIED, SHALL BE INSTALLED ON ALL SANITARY MANHOLES ON THIS PROJECT. A RUBBER SEAL EXTENSION, TO COVER ANY ADDITIONAL HEIGHTS OF CHIMNEY NOT COVERED BY THE SEAL ITSELF, SHALL BE USED AS DIRECTED. THE EXTERNAL RUBBER SEAL AND SEAL EXTENSIONS SHALL BE AS MANUFACTURED BY CRETEX SPECIALTY PRODUCTS, OR EQUIVALENT.THE SLEEVE AND EXTENSIONS SHALL HAVE A MINIMUM THICKNESS OF 3/16 INCHES AND SHALL BE EXTRUDED OR MOLDED FROM A HIGH GRADE RUBBER COMPOUND CONFORMING TO THE APPLICABLE REQUIREMENTS OF ASTM C923, WITH A MINIMUM 1500 PSI TENSILE STRENGTH, MAXIMUM 18% COMPRESSION SET AND A HARDNESS (DUROMETER) OF 48+/-5. THE BANDS USED FOR COMPRESSING THE SLEEVE AND EXTENSION AGAINST THE MANHOLE SHALL BE FABRICATED FROM 16 GAUGE STAINLESS STEEL CONFORMING TO ASTM A240 TYPE 304, ANY SCREWS, BOLTS OR NUTS USED ON THIS BAND SHALL BE STAINLESS STEEL CONFORMING TO ASTM F593 AND 594, TYPE 304. CEMENT MORTAR SHALL BE USED IN THE JOINT BETWEEN THE MANHOLE FRAME AND CHIMNEY OR CONE. THIS JOINT SHALL BE 3/4 INCH THICK. DETAILED INSTALLATION PROCEDURES SHALL BE IN ACCORDANCE WITH THE MANUFACTURERS INSTRUCTIONS. THE SLEEVE SHALL BE CORRUGATED AND BE AVAILABLE IN UNEXPANDED VERTICAL HEIGHTS OF 6 AND 9 INCHES, EACH CAPABLE OF VERTICAL EXPANSION OF NOT LESS THAN 2 INCHES WHEN INSTALLED. ALL COSTS FOR THE FURNISHING AND INSTALLATION OF THE EXTERNAL RUBBER SEAL AND EXTENSION SHALL BE INCLUDED IN THE UNIT PRICE BID FOR SANITARY MANHOLES.

CHIM-01

EXTERNAL SANITARY MANHOLE CHIMNEY SEAL

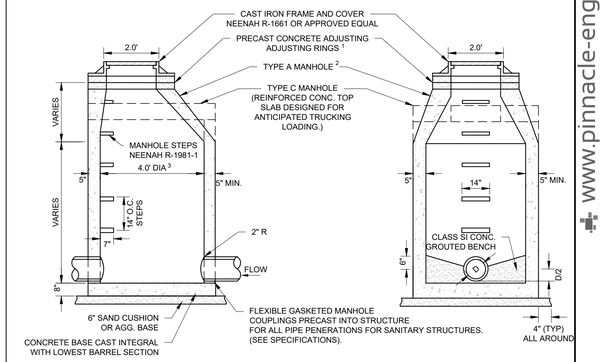

NOTES:

1. EASY STICK, RUBBER GASKET OR APPROVED EQUIVALENT SHALL BE PLACED AT ALL JOINTS BETWEEN ADJUSTING RINGS FOR SANITARY MANHOLES
2. THE FLAT TOP MAYBE USED IN LIEU OF THE TAPERED TOP WHEN FIELD CONDITIONS PROHIBIT THE USE OF A TAPERED TOP.
3. STRUCTURE TO BE 4'-0" DIA UNLESS OTHERWISE INDICATED ON THE PLANS.

SANITARY MANHOLE

#400 10-10-13

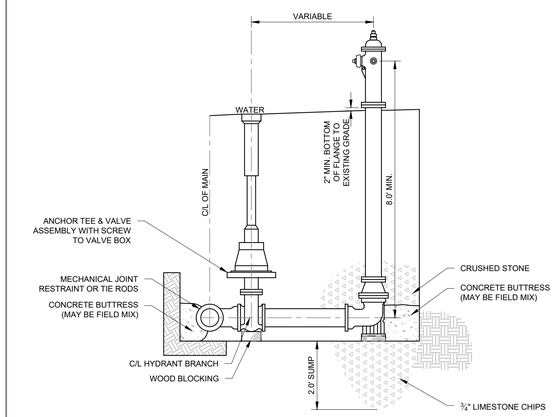

NOTES:

1. MEGALUG RESTRAINING GLANDS ON ALL MECHANICAL JOINTS, THE BOLTS & NUTS ARE TO BE HIGH STRENGTH LOW ALLOY STEEL (CORTEN) AS PER SECTION 11.6.5 OF A.W.W.A. C-111.
2. THE FOLLOWING HYDRANTS SHALL BE ALLOWED:

   MUELLER SUPER CENTURION 250 3-WAY FIRE HYDRANT
   U.S. PIPE METROPOLITAN / M-94 DUCTILE IRON FIRE HYDRANT
   WATEROUS 5¼" PACER FIRE HYDRANT

FIRE HYDRANT

#501 10-10-13

CONSTRUCTION STANDARDS

DRAFTED: MS DESIGNED: JKB REVIEWED: BDJ

PLAN I DESIGN I DELIVER
www.pinnacle-engr.com
PINNACLE ENGINEERING GROUP
ENGINEERING I NATURAL RESOURCES I SURVEYING
IL Design Firm 184.006289-0010
CHICAGO OFFICE:
1051 E. MAIN ST. | SUITE 217
EAST DUNDEE, IL 60118
(847) 551-5300
CHICAGO I MILWAUKEE I NATIONWIDE

NORTHWEST GATEWAY CENTER
1400-1500 WEST DUNDEE ROAD
ARLINGTON HEIGHTS, ILLINOIS

REVISIONS

1	VILLAGE COMMENTS	5/21/21
2	VILLAGE COMMENTS	7/7/21
3	VILLAGE COMMENTS	8/6/21

CONSTRUCTION STANDARDS

PEG JOB No. 2383.00-1L
PEG PM BDJ
START DATE 04/09/21
SCALE

SHEET C-25 OF C-28

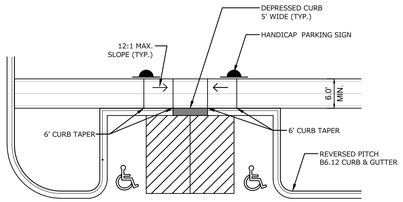

NOTES:

1. REFER TO SITE & GRADING PLAN FOR ACTUAL LOCATIONS OF HC RAMPS, STRIPING, AND CURB TAPER LOCATIONS.
2. SEE STRIPING DETAIL FOR ADDITIONAL INFORMATION.
3. SEE GRADING PLAN FOR ADDITIONAL INFORMATION.
4. HANDICAP STALL SHALL BE CONSTRUCTED PER LOCAL ADA STANDARDS.
5. PAINT SHALL BE HIGH QUALITY YELLOW PAINT PER IDOT SPECIFICATIONS.

TYPICAL HANDICAP DETAIL

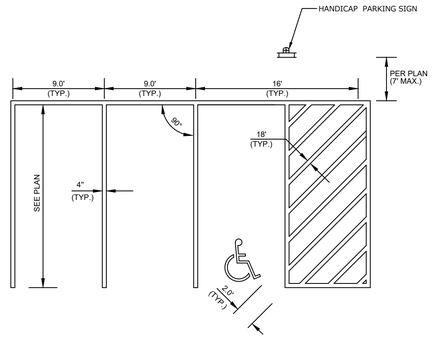

NOTES:

1. HANDICAP STALL SHALL BE CONSTRUCTED PER LOCAL ADA STANDARDS.
2. PAINT SHALL BE HIGH QUALITY YELLOW PAINT PER IDOT SPECIFICATIONS.

STRIPING DETAIL

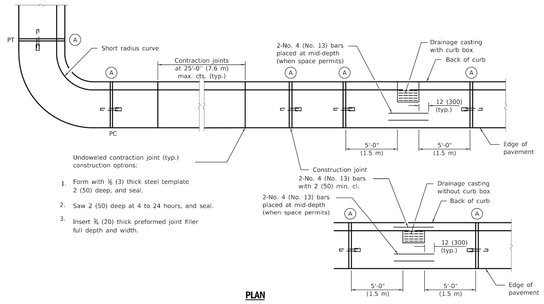

PLAN

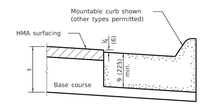

ON DISTURBED SUBGRADE

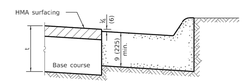

ON UNDISTURBED SUBGRADE

ADJACENT TO FLEXIBLE PAVEMENT

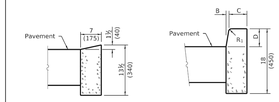

DEPRESSED CURB

BARRIER CURB

ADJACENT TO FLEXIBLE PAVEMENT

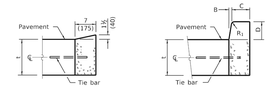

DEPRESSED CURB

BARRIER CURB

ADJACENT TO PCC PAVEMENT OR PCC BASE COURSE

CONCRETE CURB TYPE B

	MIN.	MAX.
A	1.6"	2.4"
B	0.65"	1.5"
C	*	*
D	0.9"	1.4"

* THE C DIMENSION IS 50% TO 65% OF THE D DIMENSION

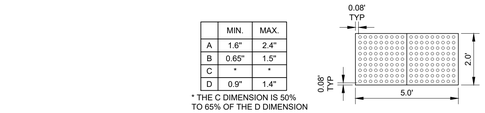

PLAN VIEW

DETECTABLE WARNING FIELD (TYPICAL)**

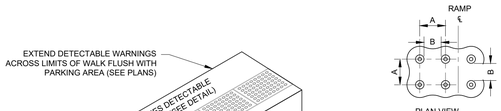

PLAN VIEW

ELEVATION VIEW

TRUNCATED DOMES DETECTABLE WARNING PATTERN DETAIL

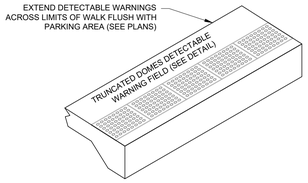

NOTES:

1. DETECTABLE WARNING FIELDS TO BE NEENAH FOUNDRY DETECTABLE WARNING FIELDS (OR APPROVED EQUAL), UNPAINTED NATURAL COLOR AND FIELD WEATHERED PRIOR TO INSTALLATION (VERIFY COLOR WITH OWNER PRIOR TO INSTALLATION.

DETECTABLE WARNING TRUNCATED DOMES

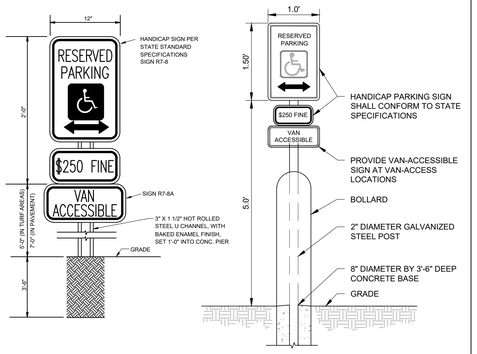

HANDICAP SIGNS

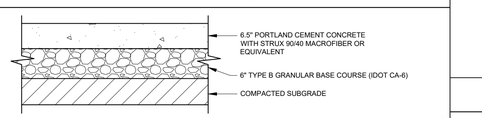

CONCRETE PAVEMENT SECTION

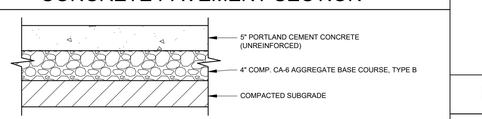

SIDEWALK SECTION

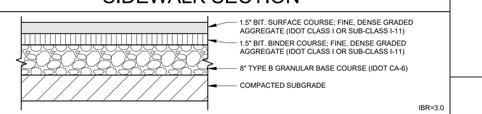

LIGHT DUTY ASPHALT PAVEMENT SECTION

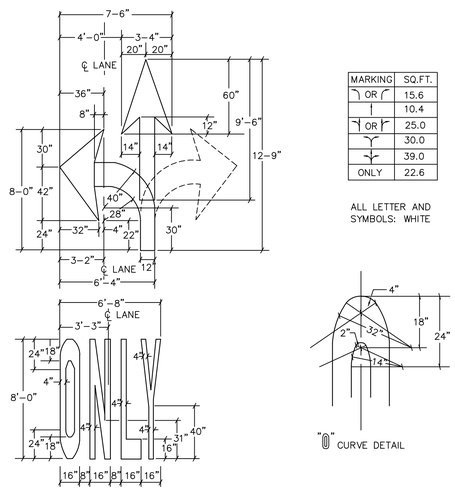

MARKING	SQ.FT.
OR	15.6
	10.4
OR	25.0
	30.0
	39.0
ONLY	22.6

ALL LETTER AND SYMBOLS: WHITE

"0" CURVE DETAIL

STANDARD MARKINGS & SYMBOLS

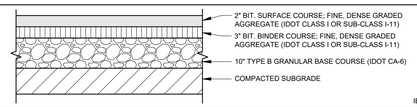

HEAVY DUTY ASPHALT PAVEMENT SECTION

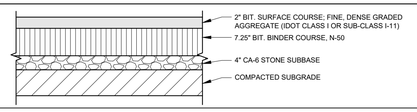

FIRE LANE ASPHALT PAVEMENT SECTION

Illinois Department of Transportation

PASSED January 1, 2018
Ronald Tweedy
ENGINEER OF POLICY AND PROCEDURES
APPROVED January 1, 2018
Thomas J. Hess
ENGINEER OF DESIGN AND ENVIRONMENT

CONCRETE CURB TYPE B AND COMBINATION CONCRETE CURB AND GUTTER

(Sheet 2 of 2)

STANDARD 606001-07

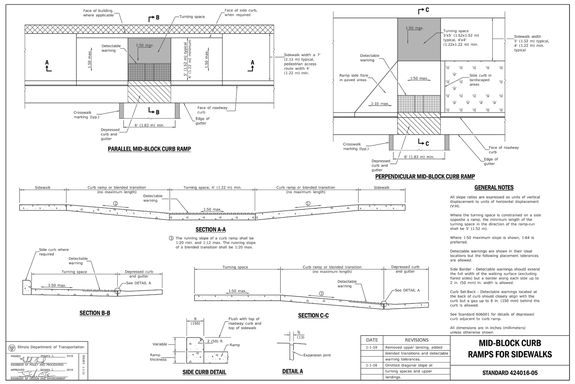

GENERAL NOTES

All slope ratios are expressed as units of vertical displacement to units of horizontal displacement (V:H).

Where the turning space is constrained on a side opposite a ramp, the minimum length of the turning space in the direction of the ramp-run shall be 5' (1.52 m).

Where 1:50 maximum slope is shown, 1:48 is preferred.

Detectable warnings are shown in their ideal location. Within the following placement tolerances are allowed:

Side Border - Detectable warnings should extend the full width of the walking surface (excluding flared sides) but a border along each side up to 2 in. (50 mm) in width is allowed.

Curb Set Back - Detectable warnings located at the back of curb should closely align with the back of curb but up to 6 in. (150 mm) behind the curb is allowed.

See Standard 606001 for details of depressed curb adjacent to curb ramp.

All dimensions are in inches (millimeters) unless otherwise shown.

DATE	REVISIONS
1-1-18	Removed upper landing, added blended transitions and detectable warning tolerances.
1-1-18	Omitted diagonal slope at turning spaces and upper landings.

MID-BLOCK CURB RAMPS FOR SIDEWALKS

STANDARD 424016-05

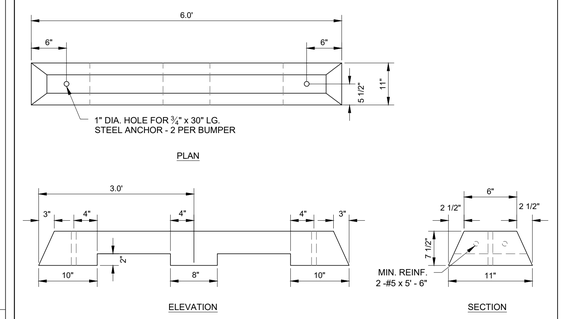

CONCRETE WHEEL STOP

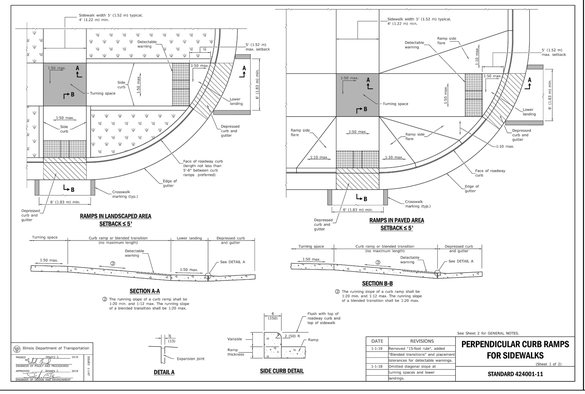

See Sheet 2 for GENERAL NOTES.

DATE	REVISIONS
1-1-18	Removed "15-foot rule", added blended transitions and detectable warnings tolerances for detectable warnings.
1-1-18	Omitted diagonal slope at turning spaces and lower landings.

PERPENDICULAR CURB RAMPS FOR SIDEWALKS

(Sheet 1 of 2)

STANDARD 424001-11

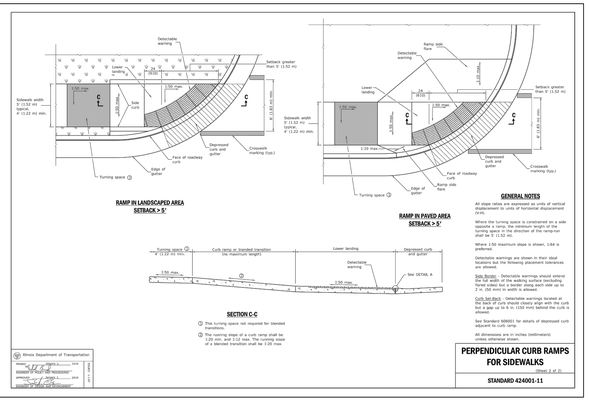

GENERAL NOTES

All slope ratios are expressed as units of vertical displacement to units of horizontal displacement (V:H).

Where the turning space is constrained on a side opposite a ramp, the minimum length of the turning space in the direction of the ramp-run shall be 5' (1.52 m).

Where 1:50 maximum slope is shown, 1:48 is preferred.

Detectable warnings are shown in their ideal location. Within the following placement tolerances are allowed:

Side Border - Detectable warnings should extend the full width of the walking surface (excluding flared sides) but a border along each side up to 2 in. (50 mm) in width is allowed.

Curb Set Back - Detectable warnings located at the back of curb should closely align with the back of curb but up to 6 in. (150 mm) behind the curb is allowed.

See Standard 606001 for details of depressed curb adjacent to curb ramp.

All dimensions are in inches (millimeters) unless otherwise shown.

PERPENDICULAR CURB RAMPS FOR SIDEWALKS

(Sheet 2 of 2)

STANDARD 424001-11

DRAFTED: MSL DESIGNED: JKB REVIEWED: BDJ APPROVED: 8/9/2021 8:55 AM – Z:\Projects\2020\2283.00-IL\312 – ENGINEERING\FINAL\SHEETSET\C-8 CONSTRUCTION

PLAN I DESIGN I DELIVER
www.pinnacle-engr.com

PINNACLE ENGINEERING GROUP
ENGINEERING I NATURAL RESOURCES I SURVEYING
IL Design Firm 184.006289-0010

CHICAGO OFFICE:
1051 E. MAIN ST. | SUITE 217
EAST DUNDEE, IL 60118
(847) 551-5300
CHICAGO I MILWAUKEE : NATIONWIDE

NORTHWEST GATEWAY CENTER
1400-1500 WEST DUNDEE ROAD
ARLINGTON HEIGHTS, ILLINOIS

REVISIONS

1	VILLAGE COMMENTS	5/21/21	
2	VILLAGE COMMENTS	7/7/21	
3	VILLAGE COMMENTS	8/6/21	

CONSTRUCTION STANDARDS

PEG JOB No. 2283.00-IL
PEG PM BDJ
START DATE 04/09/21
SCALE

SHEET C-26 OF C-28

CONSTRUCTION STANDARDS

(RESERVED FOR CONTECH SHEETS)

DRAFTED: MSL DESIGNED: JKB REVIEWED: BDJ

PLAN I DESIGN I DELIVER
www.pinnacle-engr.com
PINNACLE ENGINEERING GROUP
ENGINEERING I NATURAL RESOURCES I SURVEYING
IL Design Firm 184.006289-0010
CHICAGO OFFICE:
1051 E. MAIN ST. I SUITE 217
EAST DUNDEE, IL 60118
(847) 551-5300
CHICAGO I MILWAUKEE : NATIONWIDE

NORTHWEST GATEWAY CENTER
1400-1500 WEST DUNDEE ROAD
ARLINGTON HEIGHTS, ILLINOIS

REVISIONS

1	VILLAGE COMMENTS	5/21/21
2	VILLAGE COMMENTS	7/7/21
3	VILLAGE COMMENTS	8/6/21

CONSTRUCTION STANDARDS

PEG JOB No. **2283.00-1L**
PEG PM **BDJ**
START DATE **04/09/21**
SCALE

SHEET
C-27
OF
C-28

CONSTRUCTION STANDARDS

(RESERVED FOR CONTECH SHEETS)

CONSTRUCTION STANDARDS

DRAFTED: MSL DESIGNED: JKB REVIEWED: BDJ

PLAN I DESIGN I DELIVER
www.pinnacle-engr.com
PINNACLE ENGINEERING GROUP
ENGINEERING I NATURAL RESOURCES I SURVEYING
IL Design Firm 184.006289-0010
CHICAGO OFFICE:
1051 E. MAIN ST. I SUITE 217
EAST DUNDEE, IL 60118
(847) 551-5300
CHICAGO I MILWAUKEE : NATIONWIDE

NORTHWEST GATEWAY CENTER
1400-1500 WEST DUNDEE ROAD
ARLINGTON HEIGHTS, ILLINOIS

REVISIONS

1	VILLAGE COMMENTS	5/21/21
2	VILLAGE COMMENTS	7/7/21
3	VILLAGE COMMENTS	8/6/21

CONSTRUCTION STANDARDS

PEG JOB No. **2283.00-1L**
PEG PM **BDJ**
START DATE **04/09/21**
SCALE

SHEET
C-28
OF
C-28