RWG ENGINEERING, LLC
CIVIL ENGINEERING – REAL ESTATE CONSULTING – PROJECT MANAGEMENT
ILLINOIS PROFESSIONAL DESIGN FIRM #184–006370

LIMITATION OF WARRANTY OF ENGINEER'S INSTRUMENTS OF SERVICE

THE ENGINEER AND HIS CONSULTANTS DO NOT WARRANT OR GUARANTEE THE ACCURACY AND COMPLETENESS OF THE DELIVERABLES HEREIN BEYOND A REASONABLE DILIGENCE. IF ANY MISTAKES, OMISSIONS, OR DISCREPANCIES ARE FOUND TO EXIST WITHIN THE DELIVERABLES, THE ENGINEER SHALL BE PROMPTLY NOTIFIED SO THAT HE MAY HAVE THE OPPORTUNITY TO TAKE WHATEVER STEPS NECESSARY TO RESOLVE THEM. FAILURE TO PROMPTLY NOTIFY THE ENGINEER OF SUCH CONDITIONS SHALL ABSOLVE THE ENGINEER FROM ANY RESPONSIBILITY FOR THE CONSEQUENCES OF SUCH FAILURE. ACTIONS TAKEN WITHOUT THE KNOWLEDGE AND CONSENT TO THE ENGINEER, OR IN CONTRADICTION TO THE ENGINEER'S DELIVERABLES OR RECOMMENDATIONS, SHALL BECOME THE RESPONSIBILITY NOT OF THE ENGINEER BUT OF THE PARTIES RESPONSIBLE FOR TAKING SUCH ACTION.

FINAL ENGINEERING PLANS
FOR
SIGWALT STREET APARTMENTS
45 S. CHESTNUT AVE
ARLINGTON HEIGHTS, ILLINOIS

PLANS PREPARED FOR
CA VENTURES
130 E. RANDOLPH STREET SUITE 2100
CHICAGO, ILLINOIS 60601
(312) 800-5370

© COPYRIGHT 2017

LEGEND

EXISTING / PROPOSED

SANITARY MANHOLE
STORM MANHOLE
CATCH BASIN
INLET
PRECAST FLARED END SECTION
CONCRETE HEADWALL
VALVE VAULT
VALVE BOX
FIRE HYDRANT
BUFFALO BOX
CLEANOUT
SANITARY SEWER
FORCE MAIN
STORM SEWER
WATER MAIN
CONSTRUCT WATER MAIN UNDER SEWER
GRANULAR TRENCH BACKFILL
STREET LIGHT
ELECTRICAL CABLE (E)
2" CONDUIT ENCASEMENT
ELECTRICAL TRANSFORMER OR PEDESTAL
POWER POLE
STREET SIGN
GAS MAIN (G)
TELEPHONE LINE (T)
CONTOUR (749)
SPOT ELEVATION (×750.00)
WETLANDS
FLOODWAY
FLOODPLAIN
HIGH WATER LEVEL (HWL)
NORMAL WATER LEVEL (NWL)
DIRECTION OF SURFACE FLOW
DITCH OR SWALE
OVERFLOW RELIEF ROUTING
SLOPE BANK
TREE WITH TRUNK SIZE
SOIL BORING
TOPSOIL PROBE
FENCE LINE, WIRE OR SILT
FENCE LINE, CHAIN LINK OR IRON
FENCE LINE, WOOD OR PLASTIC
CONCRETE SIDEWALK
CURB AND GUTTER
DEPRESSED CURB
REVERSE PITCH CURB & GUTTER
EASEMENT LINE

ABBREVIATIONS

BL	BASE LINE	NWL	NORMAL WATER LEVEL
C	LONG CHORD OF CURVE	PC	POINT OF CURVATURE
C & G	CURB AND GUTTER	PT	POINT OF TANGENCY
CB	CATCH BASIN	PVI	POINT OF VERTICAL INTERSECTION
CL	CENTERLINE	R	RADIUS
D	DEGREE OF CURVE	ROW	RIGHT–OF–WAY
EP	EDGE OF PAVEMENT	SAN	SANITARY SEWER
FF	FINISHED FLOOR	ST	STORM SEWER
FG	FINISHED GRADE	T	TANGENCY OF CURVE
FL	FLOW LINE	TB	TOP OF BANK
FP	FLOODPLAIN	TC	TOP OF CURB
FR	FRAME	TF	TOP OF FOUNDATION
FW	FLOODWAY	TP	TOP OF PIPE
HWL	HIGH WATER LEVEL	TS	TOP OF SIDEWALK
INV	INVERT	TW	TOP OF WALK
L	LENGTH OF CURVE	WM	WATER MAIN
MH	MANHOLE	Δ	INTERSECTION ANGLE

811 Know what's below. Call before you dig.
Formerly JULIE 1–800–892–0123

LOCATION MAP

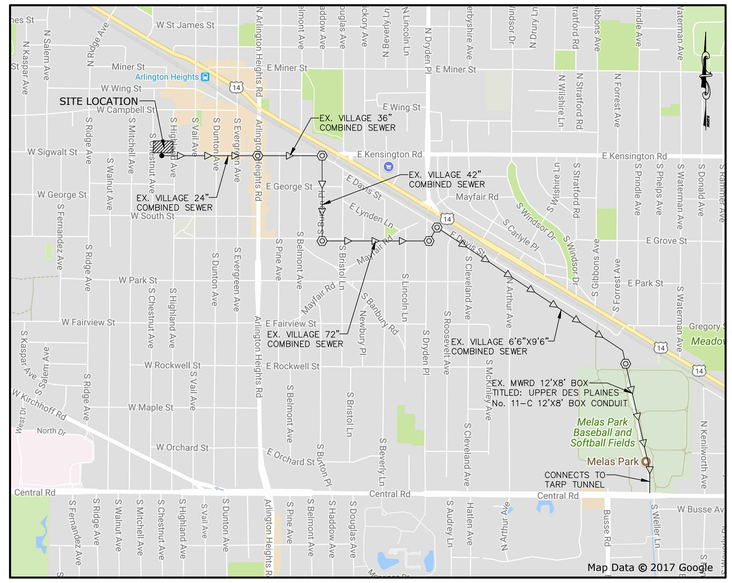

CONTACTS

VILLAGE OF ARLINGTON HEIGHTS
Community Development: (847) 368–5200
Address
City, State ZIP

Public Works Department: (847) 368–5800
222 N Ridge Ave.
Arlington Heights, IL 60005

J.U.L.I.E.
Underground Utility Locations
1–800–892–0123
811

GENERAL NOTES

1. The contractor shall notify the following governmental agencies at least two working days prior to commencement of construction:
   - Village of Arlington Heights Public Works Department (847–368–5800)
2. The contractor shall notify all utility companies and arrange for their facilities to be located prior to work in any easement, right–of–way, or suspected utility location. Repair of any damage to existing facilities shall be the responsibility of the contractor. Utility locations shown herein are for graphic illustration only and are not to be relied upon.
3. Prior to commencement of any offsite construction, the contractor shall secure written authorization that all offsite easements have been secured, and that permission has been granted to enter onto private property.
4. Elevations shown herein reflect NAVD 1988 datum.
5. The boundary and topographic survey data for this project is based on a field survey prepared by Professional Associated Survey, Inc., dated February 13, 2017. The contractor shall verify existing conditions prior to commencing construction and shall immediately notify the engineer in writing of any differing conditions.
6. RWG Engineering, LLC, it's employees and agents are not responsible for the safety of any party at or on the construction site. Safety is the sole responsibility of the contractor, and any other entity performing work at the site. Neither the owner nor the engineer assumes any responsibility for job site safety or for the means, methods or sequences of construction.
7. Except where modified by the contract documents, all work proposed hereon shall be in accordance with the following specifications, which are hereby made a part hereof:
   A. "Standard Specifications for Road and Bridge Construction in Illinois," as prepared by I.D.O.T. latest edition.
   B. "Standard Specifications for Water and Sewer Main Construction in Illinois," latest edition.
   C. "Illinois Recommended Standards for Sewage Works," as published by the I.E.P.A., latest edition.
   D. The subdivision and development codes and standards of the Village of Arlington Heights, as published by the Municipality.
   E. "Illinois Accessibility Code" as published by the State of Illinois Capital Development Board, effective April 24, 1997.
   F. The National Electric Code.
   G. "Illinois Urban Manual" as prepared by the U.S. Dept. of Agriculture latest edition.
8. The Village of Arlington Heights Development Ordinance shall take precedence if a conflict in project specifications occurs.

INDEX OF SHEETS

1. TITLE SHEET
2. EXISTING CONDITIONS AND DEMOLITION PLAN
3. SITE GEOMETRIC AND PAVING PLAN
4. SOIL EROSION AND SEDIMENT CONTROL (SESC) PLAN
5. GRADING PLAN
6. UTILITY PLAN
7. PROJECT NOTES AND SPECIFICATIONS
8. CONSTRUCTION DETAILS AND STANDARDS
9. CONSTRUCTION DETAILS AND STANDARDS

NOTE:
COORDINATES AT LOT CORNERS SHOWN HEREON ARE REFERENCED TO ILLINOIS STATE PLANE SYSTEM COORDINATES, EAST ZONE. ESTABLISHED THROUGH VRS TRIMBLE NETWORK.

NORTHWEST CORNER:
N 1972496.8772, E 1078414.4342

SOUTHWEST CORNER:
N 1972346.8773, E 1078414.2808

NORTHEAST CORNER:
N 1972496.8590, E 1078678.3594

SOUTHEAST CORNER:
N 1972346.8592, E 1078678.1808

"TO THE BEST OF OUR KNOWLEDGE AND BELIEF, THE DRAINAGE OF SURFACE WATERS WILL NOT BE CHANGED BY THE CONSTRUCTION OF THIS PROJECT, OR, THAT IF DRAINAGE WILL BE CHANGED, REASONABLE PROVISION HAS BEEN MADE FOR COLLECTION AND DIVERSION OF SUCH SURFACE WATERS INTO PUBLIC AREAS, OR DRAINS APPROVED FOR USE BY THE VILLAGE, AND THAT SUCH SURFACE WATERS ARE PLANNED FOR IN ACCORDANCE WITH GENERALLY ACCEPTED ENGINEERING PRACTICES SO AS TO REDUCE THE LIKELIHOOD OF DAMAGE TO ADJOINING PROPERTIES BECAUSE OF THE CONSTRUCTION OF THIS PROJECT."

MAUREEN R. MULLIGAN 062-051535 REGISTERED PROFESSIONAL ENGINEER OF ILLINOIS

Maureen R. Mulligan
REGISTERED PROFESSIONAL ENGINEER

EXPIRATION DATE: 11/30/17

BENCHMARKS

SOURCE BENCHMARK:
ALTA/NSPS LAND TITLE SURVEY PROVIDED BY PROFESSIONALS ASSOCIATED SURVEY, INC.
7100 N. TRIP AVENUE, LINCOLNWOOD, IL. 60712

SITE BENCHMARK:
FIRE HYDRANT ON N.W. CORNER OF SIGWALT STREET AND S. HIGHLAND AVENUE. N.W. BOLT ON FIRE HYDRANT
ELEV.= 692.99

MAUREEN R. MULLIGAN 062-051535 REGISTERED PROFESSIONAL ENGINEER OF ILLINOIS

Maureen R. Mulligan
EXPIRATION DATE: 11/30/17

	DATE	REVISION	DRAWN BY
1.	08/16/17	VILLAGE REVISIONS	ZRN
2.	09/06/17	VILLAGE REVISIONS	TLM
3.	12/15/17	VILLAGE/CLIENT REVISIONS	TLM
4.	01/26/18	VILLAGE REVISIONS	TLM
5.	02/13/18	CLIENT REVISIONS	AVS

SIGWALT STREET APARTMENTS
ARLINGTON HEIGHTS, ILLINOIS
TITLE SHEET

RWG Engineering, LLC
Civil Engineering ♦ Real Estate Consulting ♦ Project Management
975 E. 22nd St. Suite 400
Wheaton, IL 60189
630.480.7889
www.rwg-engineering.com

PROJECT NO. 29112716
DATE 07/10/17
SCALE NONE
PROJ. MGR. RWG
PROJ. ASSOC. MRM
DRAWN BY ZRN

SHEET 1 OF 9

February 13, 2018 2:10:15 p.m. AcadVer:22.0s (LMS Tech)
Drawing: S:\29112716 – ARLINGTON HTS APARTMENTS\300_ENGINEERING\310_CADD\FINAL\291_BASE.DWG

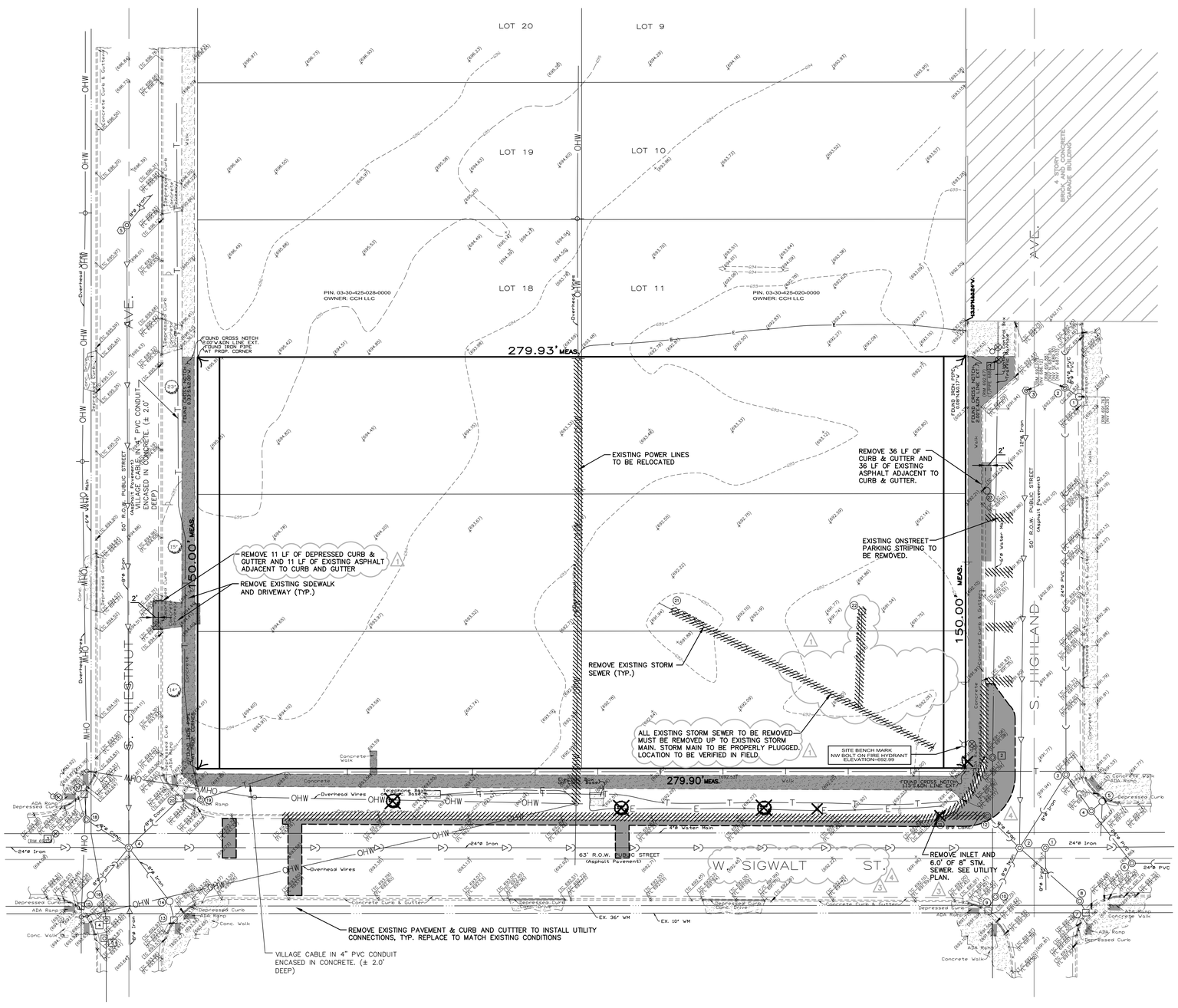

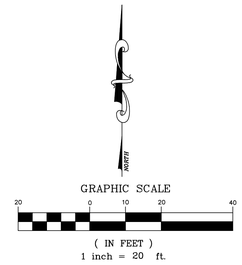

SURVEY NOTE

THE INFORMATION SHOWN HEREON IS BASED ON A BOUNDARY AND TOPOGRAPHIC SURVEY DONE BY PROFESSIONALS ASSOCIATED SURVEY, INC, ORDER NO. 17-91627, DATED 02/13/17

ABBREVIATIONS LEGEND (IN ADDITION TO TITLE SHEET LEGEND)

EX = EXISTING
PR = PROPOSED
BC = BACK OF CURB
FC = FACE OF CURB
EP = EDGE OF PAVEMENT
PL = PROPERTY LINE
FB = FACE OF BUILDING
EC = EDGE OF CONCRETE
RW = RETAINING WALL
ROW = RIGHT OF WAY
BC/BC= BACK OF CURB TO BACK OF CURB
SW = SIDEWALK
R = RADIUS
(TYP) = TYPICAL

EXISTING PROPERTY DATA

ADDRESS: 37-45 S. CHESTNUT AVE, ARLINGTON HEIGHTS
36-40 S. HIGHLAND AVE, ARLINGTON HEIGHTS

EXISTING ZONE:
VC-PD (VILLAGE CENTER - PLANNED DEVELOPMENT)

TOTAL SITE AREA BEFORE DEDICATED ROW: 41,987 SF (0.964 Ac)
TOTAL SITE AREA AFTER DEDICATED ROW: 39,587 S.F. (0.909 Ac)

PIN: 03-30-425-012-0000
03-30-425-013-0000
03-30-425-014-0000
03-30-425-021-0000
03-30-425-022-0000
03-30-425-023-0000

LEGAL DESCRIPTION: LOTS 12, 13, 14, 15, 16 AND 17 IN BLOCK 2 IN A SUBDIVISION OF LOTS 26, 27, 28 AND 29 IN ASSESSOR'S SUBDIVISION OF SECTION 30, TOWNSHIP 42 NORTH, RANGE 11, EAST OF THE THIRD PRINCIPAL MERIDIAN, IN COOK COUNTY, ILLINOIS

(2) SANITARY STRUCTURE NUMBER
(11) STORM STRUCTURE NUMBER
[5] WATERMAIN STRUCTURE NUMBER

EXISTING UTILITY STRUCTURE SCHEDULE

SANITARY SEWER STRUCTURES

(1) EX SAN M.H. RIM= 691.91 INV= 684.56 (8" S) INV= 684.26 (24" W) INV= 684.21 (24" E)	(2) EX SAN M.H. RIM= 691.94 INV= 686.99 (8" NE) INV= 687.04 (8" SE) INV= 688.49 (8" SW) INV= 686.84 (8" NW) INV= 684.39 (24" W) INV= 684.29 (24" E)
(3) EX SAN M.H. RIM= 692.02 INV= 686.12 (12" S)	(4) EX SAN M.H. RIM= 693.95 INV= 689.85 (8" SE) INV= 685.75 (8" S) INV= 689.43 (8" SW) INV= 689.55 (8" NW) INV= 687.25 (8" N) INV= 690.00 (8" NE) INV= 685.60 (24"W) INV= 685.40 (24"E)
(5) EX SAN M.H. RIM= 696.21 INV= 690.76 (8" NE) INV= 688.73 (8" S)	

STORM SEWER STRUCTURES

(1) EX STM C.B. RIM= 691.76 INV= 690.26 (8" NW)	(2) EX STM M.H. RIM= 691.88 INV= 687.08 (24" N) INV= 689.30 (8" E) INV= 687.03 (24" S)
(3) EX STM M.H. RIM= 691.49 INV= 686.67 (24" SE) INV= 686.09 (8" SW) INV= 686.59 (24" N)	(4) EX STM M.H. RIM= 691.33 INV= 686.73 (24" NW) INV= 686.53 (24" SE)
(5) EX STM C.B. RIM= 691.07 INV= 688.97 (24" SW) INV= 688.91 (24" S)	(6) EX STM M.H. RIM= 691.83 INV= 687.03 (24" E) INV= 686.83 (24" NW)
(7) EX STM INLET RIM= 691.26 INV= 688.40 (8" NW)	(8) EX STM M.H. RIM= 691.55 INV= 688.50 (8" SE) INV= 688.30 (8" NW)
(9) EX STM INLET RIM= 691.34 INV= 688.54 (8" NE)	(10) EX STM M.H. RIM= 691.53 INV= 688.51 (8" NE)
(11) EX STM INLET RIM= 690.97 INV= 688.27 (8" E)	(12) EX STM M.H. RIM= 691.48 INV= 688.03 (8" W,SE)
(13) EX STM INLET RIM= 692.87 INV= 689.97 (8" N)	(14) EX STM C.B. RIM= 693.24 INV= 690.04 (8" SE) INV= 689.84 (8" NW)
(15) EX STM INLET RIM= 693.28 INV= 690.48 (8" NE)	(16) EX STM C.B. RIM= 693.50 INV= 690.40 (8" SW) INV= 690.20 (8" NE)
(17) EX STM INLET RIM= 693.30 INV= 691.05 (8" S)	(18) EX STM M.H. RIM= 693.68 WATER FILLED T/ WATER= 690.03
(19) EX STM M.H. RIM= 693.70	(20) EX STM INLET RIM= 693.44 END OF PIPE SEALED
(21) EX STM C.B. RIM= 691.68 UNABLE TO OPEN INV= 688.88 (8" SE)	(22) EX STM C.B. RIM= 691.50 UNABLE TO OPEN INV= 688.85 (8" S)
(23) EX STM C.B. RIM= 691.52 WATER FILLED T/WATER= 687.67	

WATERMAIN STRUCTURES

[1] EX VALVE VAULT RIM= 692.67 T/P= 688.02	[2] EX WATER M.H. RIM= 691.18 WATER FILLED T/WATER= 689.18
[3] EX VALVE VAULT RIM= 693.91	[4] EX CLEANOUT RIM= 693.53 T/P= 688.38
[5] EX CLEANOUT RIM= 693.55 T/P= 688.35	

DEMOLITION LEGEND

- REMOVE EXISTING PAVEMENT/SIDEWALK/STRUCTURE/C&G (INCL SAWCUT)
- TREE/BUSH/STRUCTURE REMOVAL
- REMOVE EXISTING UTILITY LINE
- TREE PROTECTION FENCE

DEMOLITION NOTES:

1. EROSION CONTROL INSTALLATION SHALL BE DONE PRIOR TO COMMENCEMENT OF ANY DEMOLITION ACTIVITY
2. EXISTING ELECTRICAL AND PHONE CABLES MAY BE LOCATED WITHIN THE PROPOSED IMPROVEMENT AREA. APPROXIMATE KNOWN LOCATIONS ARE SHOWN HEREON. THE CONTRACTOR SHALL ARRANGE FOR PRECISE LOCATION OF EXISTING CABLE SERVICES AND EXERCISE EXTREME CARE WHEN WORKING AROUND THE SAME.
3. ALL STRUCTURAL PAVEMENT MATERIALS (ASPHALT, CONCRETE SIDEWALK, CURB/GUTTER) THAT CANNOT BE CRUSHED TO AN APPROVED IDOT SPECIFICATION FOR USE AS STRUCTURAL FILL SHALL BE DISPOSED OF BY THE CONTRACTOR AT AN OFFSITE LOCATION. RE-USE OF MILLED ASPHALT AND PROPERLY CRUSHED CONCRETE AS STRUCTURAL FILL IS ACCEPTABLE AND ENCOURAGED.
4. THE CONTRACTOR SHALL TAKE ALL NECESSARY PRECAUTIONS TO PREVENT DAMAGE TO EXISTING AMENITIES SCHEDULED TO REMAIN. PROPER SAWCUTTING SHALL BE ACCOMPLISHED AT ALL POINTS OF CONNECTION OR INTERFACE BETWEEN EXISTING AND PROPOSED IMPROVEMENTS.
5. CONTRACTOR SHALL BE RESPONSIBLE TO HAVE ALL UNDERGROUND UTILITIES (EVEN IF NOT SHOWN ON THESE PLANS) LOCATED PRIOR TO DEMOLITION WORK. SANITARY SERVICE, WATERMAIN SERVICE, GAS, ELECTRIC, ETC SHALL BE CUT-OFF. CONTRACTOR TO COORDINATE WITH RESPECTIVE MUNICIPAL AGENCY TO ARRANGE FOR DISCONNECT.
6. CONTRACTOR SHALL BE RESPONSIBLE FOR ANY DAMAGE DONE TO EXISTING UTILITIES, STREET LIGHTS, SIGNS, ETC. THAT ARE NOT INTENDED TO BE PERMANENTLY REMOVED.
7. CONTRACTOR SHALL NOTIFY THE PUBLIC WORKS DEPARTMENT, ALL UTILITY COMPANIES, AND THE FIRE DEPARTMENT PRIOR TO START UP.
8. ONSITE DISTURBED AREAS TO REMAIN AS GREENSPACE SHALL BE RESTORED WITH MINIMUM 4" TOPSOIL AND SEED, OR RESTORED IN ACCORDANCE WITH THE LANDSCAPE PLAN (SEE BY OTHERS).
9. DISTURBED AREAS OF PUBLIC PARKWAYS SHALL BE RESTORED WITH MINIMUM 4" TOPSOIL AND SEED.
10. ALL EXISTING DRIVEWAY APRONS SHALL BE SAWCUT ALONG WITH REMOVAL OF ANY EXISTING DEPRESSED CURB AND GUTTER, AND NEW BARRIER CURB AND GUTTER (SIZED TO MEET EXISTING ADJACENT CONDITIONS) SHALL BE INSTALLED AND DOWELED INTO THE EXISTING ADJOINING CURB AND GUTTER.
11. UTILITY LINES SCHEDULED FOR REMOVAL SHALL BE PROPERLY DISCONNECTED FROM FACILITIES THAT ARE TO REMAIN, SECURELY PLUGGED AT ALL CONNECTION POINTS, AND EITHER REMOVED OR FILLED WITH FLOWABLE FILL (LEAN CONCRETE MIXTURE) AND ABANDONED IN PLACE (REMOVE IF LOCATED UNDER NEW BUILDING PAD AREAS). IN THE CASE OF STRUCTURE ABANDONMENT, CASTINGS AND TOP SLABS AND CONE SECTIONS SHALL BE REMOVED PRIOR TO FILLING THE STRUCTURE (UNLESS THE STRUCTURE IS EASIER TO COMPLETELY REMOVE).

DATE	REVISIONS	DRAWN BY
1. 08/16/17	VILLAGE REVISIONS	ZRN
2. 09/06/17	VILLAGE REVISIONS	TLM
3. 12/15/17	VILLAGE/CLIENT REVISIONS	TLM
4. 01/26/18	VILLAGE REVISIONS	TLM
5. 02/13/18	CLIENT REVISIONS	AVS

© COPYRIGHT 2017

SIGWALT STREET APARTMENTS
ARLINGTON HEIGHTS, ILLINOIS
EXISTING CONDITIONS AND DEMOLITION PLAN

RWG Engineering, LLC
Civil Engineering ♦ Real Estate Consulting ♦ Project Management
975 E. 22nd St. Suite 400
Wheaton, IL 60189
630.480.7889
www.rwg-engineering.com

PROJECT NO. 29112716
DATE 07/10/17
SCALE 1"=20'
PROJ. MGR. RWG
PROJ. ASSOC. MRM
DRAWN BY ZRN

February 14, 2018 10:47:43 a.m. AcadVer:22.0s (LMS Tech)
Drawing: S:\29112716 - ARLINGTON HTS APARTMENTS\300_ENGINEERING\310_CADD\FINAL\291_BASE.DWG

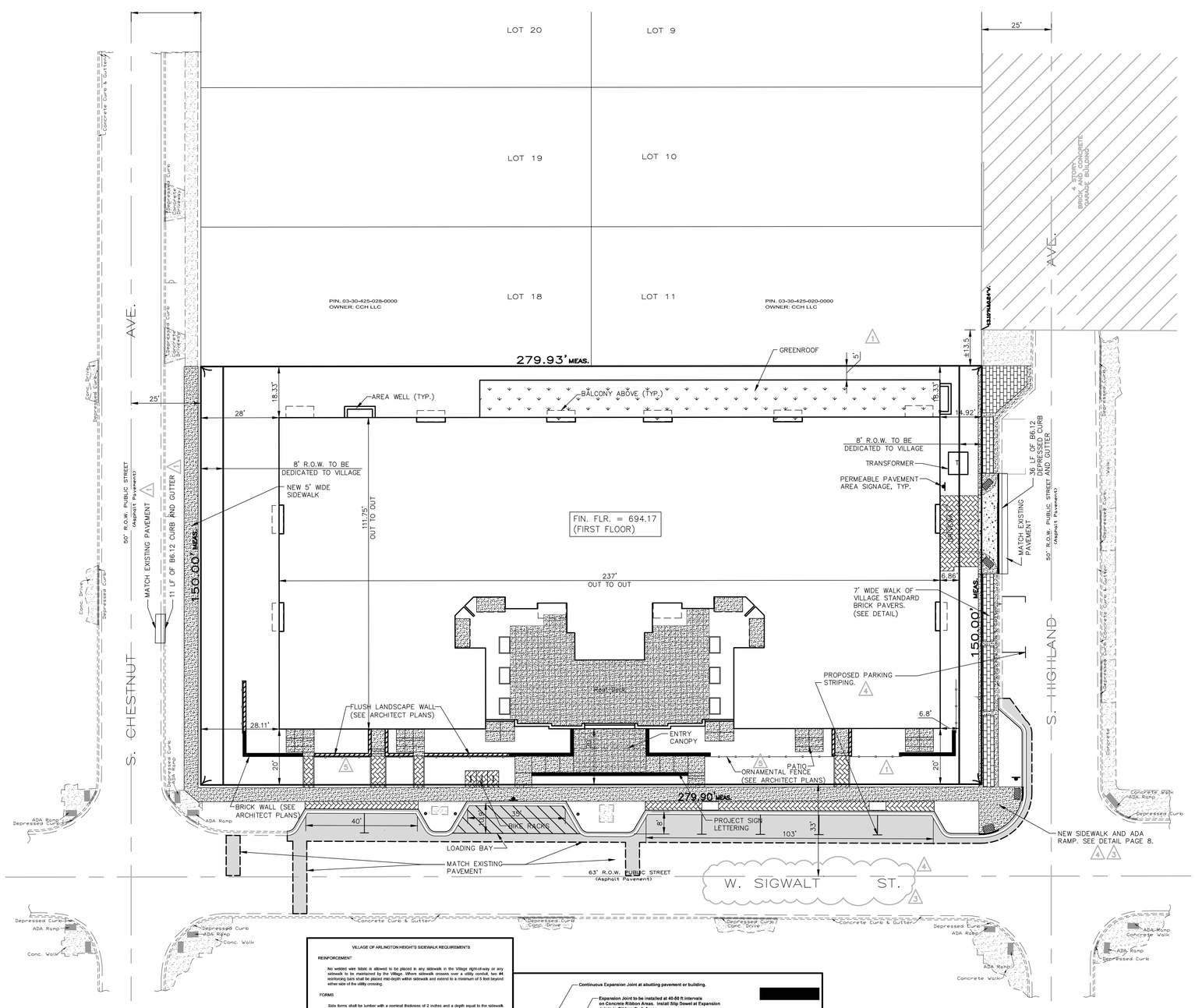

SITE DATA:

EXISTING ZONING:
VC–PD (VILLAGE CENTER – PLANNED DEVELOPMENT)

TOTAL PROPERTY SIZE AFTER DEDICATED ROW= 39,587 S.F. (0.909 AC)

PROPOSED SITE CONDITIONS:

IMPERVIOUS:

	PROPOSED BUILDING IMPERVIOUS FOOTPRINT	= 26,405 S.F.
2	SIDEWALK/PATIO AREAS	= 1,095 S.F.
5	TOTAL IMPERVIOUS AREA	= 27,501 S.F. (70%)

PERVIOUS:

	PROPOSED BUILDING GREENROOF FOOTPRINT	= 2,200 S.F.
2	PERMEABLE PAVER AREAS	= 461 S.F.
	PROPOSED GREENSPACE	= 9,425 S.F.
5	TOTAL PERVIOUS AREA	= 12,086 S.F. (30%)

GRAPHIC SCALE

20 0 10 20 40

(IN FEET)
1 inch = 20 ft.

SITE GEOMETRIC AND PAVING NOTES:

1. SIDEWALK RAMPS WITH DETECTABLE WARNINGS AND DEPRESSED CURBS SHALL BE INSTALLED AT ALL SIDEWALK CROSSINGS. SEE CONSTRUCTION STANDARDS FOR SPECIFIC DETAILS.
2. UNLESS OTHERWISE NOTED ON THE PLAN, ALL DIMENSIONS ARE TO THE BACK OF CURB, FACE OF CURB, FACE OF BUILDING, OR PROPERTY LINES.
3. UNLESS OTHERWISE NOTED, ALL CURB AND GUTTER SHALL BE B6.12 CONCRETE CURB AND GUTTER.
4. UNLESS OTHERWISE NOTED, ALL CURB RADII ARE 4' TO BACK OF CURB.
5. ALL BOUNDARY AND LOT DIMENSIONS ARE SHOWN PER THE SUBDIVISION (OR SITE) PLAT PREPARED BY PROFESSIONAL ASSOCIATED SURVEY, INC. AND DATED 02/13/17.
6. BUILDING DIMENSIONS HAVE BEEN INDICATED HEREON BASED UPON ARCHITECTURAL INFORMATION CURRENT AS OF THE BASE DATE OF THIS PLAN PREPARATION. CONTRACTOR SHALL REFER TO ARCHITECTURAL PLANS FOR PRECISE BUILDING DIMENSIONS AND ADVISE THE ARCHITECT AND ENGINEER OF ANY DISCREPANCIES PRIOR TO CONSTRUCTION.
7. IMPROVEMENTS ADJACENT TO BUILDINGS, IF SHOWN (SUCH AS TRUCK DOCKS, RETAINING WALLS, SIDEWALKS, CURBING, FENCING, CANOPIES, RAMPS, HANDICAP ACCESS, PLANTERS, DUMPSTERS, TRANSFORMERS, BOLLARDS, ETC) HAVE BEEN SHOWN FOR APPROXIMATE LOCATION ONLY– REFER TO ARCHITECTURAL PLANS FOR EXACT LOCATIONS, SPECIFICATIONS AND DETAILS.
8. THE LOCATION OF PRIVATE SIDEWALKS SHALL BE COORDINATED WITH PROPOSED DOORWAYS. CONTRACTOR TO VERIFY ACTUAL DOORWAY LOCATION WITH ARCHITECTURAL PLANS PRIOR TO CONSTRUCTING SIDEWALKS.
9. UPON COMPLETION OF PAVING OPERATIONS, THE CONTRACTOR SHALL INSTALL THE PAVEMENT MARKINGS AND STRIPES AND ALL DIRECTIONAL SIGNAGE, ETC AS SHOWN HEREON AND ON SIGNAGE AND STRIPING PLAN. PARKING STALL (EXCEPT FOR HC) MARKING COLOR IS WHITE. ALL ONSITE PAVEMENT MARKINGS AND STRIPES SHALL BE PAINTED WITH IDOT SPECIFICATION PAVEMENT PAINT. PARKING STALL STRIPES SHALL BE 4" WIDE. HANDICAP STALLS SHALL BE PAINTED YELLOW AND SIGNED PER FEDERAL, STATE AND LOCAL REQUIREMENTS.
10. PRIOR TO OPENING TO THE PUBLIC, ALL TRAFFIC CONTROL SIGNAGE SHALL BE INSTALLED AS INDICATED, SIGNS SHALL BE INSTALL WITH 3" SQUARE ALUMINUM POSTS WITH A BAKED ON ENAMEL FINISH, SET 1' INTO CONCRETE PIER AND SHALL INCLUDE A POST CAP.
11. ALL ROADWAY PATCHES SHALL HAVE SURFACE ASPHALT LAYER EXTEND 2.0' BEYOND EDGE OF TRENCH.
12. ANY STAIRWAYS LEADING TO PUBLIC SIDEWALK SHALL NOT AFFECT THE ADA COMPLIANCE OF THE PUBLIC WALK.

SURFACE IMPROVEMENT LEGEND:

- PERMEABLE PAVERS — SEE DETAIL
- VILLAGE STANDARD BRICK PAVER — SEE DETAIL
- CONCRETE DRIVEWAY APRONS (GARAGE ENTRY) — 8"– PCC PAVEMENT WITH 6"x6" No. 6 WELDED WIRE MESH; 6"– AGGREGATE BASE COURSE CA–6, TYPE B
- CONCRETE SIDEWALKS (PUBLIC AND/OR PRIVATE) — 5"– PCC SIDEWALK; 4"– AGGREGATE BASE COURSE TYPE B, CA–6
- EX. CURB AND GUTTER
- CURB AND GUTTER (B6.12) SEE DETAIL SHEET
- REVERSED PITCH CURB AND GUTTER
- DEPRESSED CURB AND GUTTER
- ADA CURB RAMP WITH DETECTABLE WARNING

ABBREVIATIONS LEGEND (IN ADDITION TO TITLE SHEET LEGEND)

EX	=	EXISTING
PR	=	PROPOSED
BC	=	BACK OF CURB
FC	=	FACE OF CURB
EP	=	EDGE OF PAVEMENT
PL	=	PROPERTY LINE
FB	=	FACE OF BUILDING
FW	=	FACE OF WALK (SIDEWALK)
ROW	=	RIGHT OF WAY
BC/BC	=	BACK OF CURB TO BACK OF CURB
SW	=	SIDEWALK
R	=	RADIUS
RW	=	RETAINING WALL
(TYP)	=	TYPICAL

PERMEABLE PAVEMENT AREA

18" (TYPICAL) — 12" (TYPICAL)

ENVIRONMENTALLY FRIENDLY PARKING LOT

BENEFITS OF THIS TECHNOLOGY INCLUDE:

- REDUCES STORMWATER RUNOFF
- IMPROVES WATER QUALITY
- CLEANS AND FILTERS STORMWATER.

MAINTAIN WITH CARE:

NO STORAGE OR DISPERSING OF GRANULAR MATERIALS

DO NOT SEAL COAT

NOTES:
1. ONE SIGN SHALL BE POSTED PER 40 PARKING SPACES.

NOT TO SCALE

TECHNICAL GUIDANCE MANUAL	7/1/15
TYPICAL SIGNAGE FOR PERMEABLE PAVEMENT AREA	STD. DWG. NO.13 PAGE NO. 14

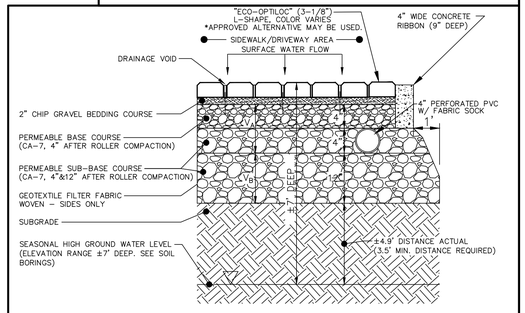

*GEOTEXTILE FILTER FABRIC TO MEET REQUIREMENTS OF IUM MATERIAL SPECIFICATION 592 GEOTEXTILE, TABLE 1, CLASS 1, WITH AN OPENING SIZE OF 0.50 mm

PERMEABLE PAVER SECTION

NOTES:
1. OFFSET A MINIMUM OF 10 FEET FROM FOUNDATIONS UNLESS WATERPROOFED, 20 FEET FROM SANITARY SEWERS, 20 FEET FROM ROADWAY GRAVEL SHOULDER AND 100 FEET FROM POTABLE WATER WELLS OR SEPTIC TANKS.
2. AVOID INSTALLATION ON SLOPES GREATER THAN 15 TO 1 AND ABOVE COMPACTED FILL.
3. WOVEN GEOTEXTILE FABRIC SHALL MEET REQUIREMENTS OF IUM MATERIAL SPECIFICATION 592 GEOTEXTILE, TABLE 1, CLASS 1, WITH AN APPARENT OPENING SIZE OF 0.50 MM.
4. STONE STORAGE OPTIONS ARE CA-7, DISTRICT VULCAN MIX, OR APPROVED ALTERNATE. NO RECYCLED MATERIALS.
5. MINIMUM DISTANCE OF 2 FEET (3.5 FEET IN COMBINED SEWER AREAS) BETWEEN BOTTOM OF BMP AND SEASONALLY HIGH GROUNDWATER LEVEL.
6. UNDERDRAINS ARE REQUIRED IN TYPICAL CLAYEY SOILS WHERE INFILTRATION RATES ARE LESS THAN 0.5 INCH/HOUR. MAXIMUM OF 1 UNDERDRAIN PER 30 FEET. PROVIDE A SOIL REPORT DOCUMENTING NATIVE INFILTRATION RATE TO FOREGO UNDERDRAINS.
7. MINIMUM UNDERDRAIN BEDDING OF TWO INCHES, MAXIMUM OF 12 INCHES.
8. ONE OBSERVATION WELL REQUIRED PER 40,000 SQUARE FEET OF SURFACE AREA.
9. FOLLOW THE REQUIRED PRETREATMENT MEASURES LISTED ON THE VOLUME CONTROL PRETREATMENT MEASURES DETAIL.
10. MAINTENANCE REQUIREMENTS INCLUDE ANNUAL VACUUMING AND LOW-PRESSURE POWER WASHING OF PAVEMENT SURFACE. ADJACENT VEGETATED AREAS SHALL BE WELL-MAINTAINED. BARE SPOTS AND ERODED AREAS SHALL BE REPLANTED AND STABILIZED IMMEDIATELY. DO NOT SEALCOAT.
11. APPROPRIATE SIGNAGE REQUIRED FOR FACILITY, REFER TO THE SIGNAGE FOR PERMEABLE PAVEMENT DETAIL.

VILLAGE OF ARLINGTON HEIGHTS SIDEWALK REQUIREMENTS

REINFORCEMENT:

No welded wire fabric is allowed to be placed in any sidewalk in the Village right-of-way or any sidewalk to be maintained by the Village. Where sidewalk crosses over a utility conduit, two #4 reinforcing bars shall be placed mid-depth within sidewalk and extend to a minimum of 5 feet beyond either side of the utility crossing.

FORMS

Side forms shall be lumber with a nominal thickness of 2 inches and a depth equal to the sidewalk thickness specified or of steel with equal rigidity. 2x4 forms will not be allowed. Side forms shall be held securely in place by stakes or braces, with the top edges of the forms true to grade. The forms shall be lightly coated with oil prior to placing concrete.

FORM REMOVAL AND BACKFILL

Unless otherwise approved by the Director of Engineering, all forms shall remain undisturbed for a minimum of 24 hours after the concrete has been placed, and be removed within 48 hours. Upon the removal of the forms, the Contractor shall have seven calendar days to backfill between the side of the sidewalk and the ground using top soil. The Contractor is responsible for maintaining proper barricades until soil has been placed.

EXPANSION JOINTS

Expansion joints shall consist of preformed joint filler, 1/2 inch thick. The top of the expansion joint shall be placed 1/4 inch below the surface of the sidewalk, and extend to the full depth of the walk. Expansion joints shall be spaced a minimum of 50 feet and shall also be placed between the sidewalk and all structures, such as light standards, manholes, etc., which extend through the sidewalk.

Where the sidewalk is constructed adjacent to pavement or curb having expansion joints , the expansion joints in the sidewalk shall be placed opposite the existing expansion joints as nearly as practicable. Expansion joints shall also be placed where the sidewalk abuts existing sidewalks, between concrete driveway pavement and sidewalk, and between sidewalk and curbs where the sidewalk abuts a curb.

Slip Dowels are to be installed at all expansion joint locations within concrete ribbon areas.

PLACING, FINISHING, PROTECTION AND CURING

The concrete sidewalk shall be placed and finished in accordance with Article 424.06 of the Standard Specifications for Road and Bridge Construction.

All exposed concrete surfaces shall be protected against damage by rain or other natural causes. The Contractor shall be responsible for protecting the concrete against vandalism until the concrete is set and cured.

The concrete shall be cured for a minimum period of three days after placement as described in Article 720.13 of the Standard Specifications for Road and Bridge Construction.

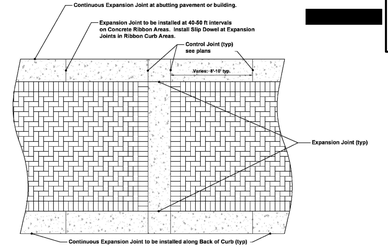

PROPOSED PAVER PATTERN DETAIL
90-DEGREE HERRINGBONE

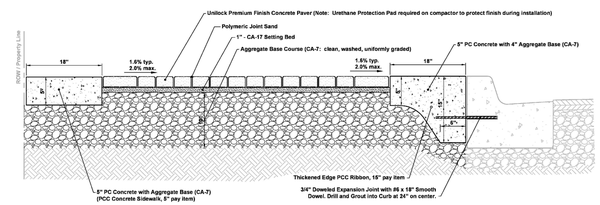

PROPOSED SIDEWALK CROSS-SECTION

1 VILLAGE PAVER DETAILS

DATE	REVISIONS	DRAWN BY
1. 08/16/17	VILLAGE REVISIONS	ZRN
2. 09/06/17	VILLAGE REVISIONS	TLM
3. 12/15/17	VILLAGE/CLIENT REVISIONS	TLM
4. 01/26/18	VILLAGE REVISIONS	TLM
5. 02/13/18	CLIENT REVISIONS	AVS

SIGWALT STREET APARTMENTS
ARLINGTON HEIGHTS, ILLINOIS
SITE GEOMETRIC AND PAVING PLAN

RWG Engineering, LLC
Civil Engineering ◆ Real Estate Consulting ◆ Project Management
975 E. 22nd St. Suite 400
Wheaton, IL 60189
630.480.7889
www.rwg-engineering.com

© COPYRIGHT 2017

PROJECT NO. 29112716
DATE 07/10/17
SCALE 1"=20'
PROJ. MGR. RWG
PROJ. ASSOC. MRM
DRAWN BY ZRN

SHEET 3 OF 9

February 14, 2018 10:52:56 a.m. AcadVer:22.0s (LMS Tech)
Drawing: S:\29112716 – ARLINGTON HTS APARTMENTS\300_ENGINEERING\310_CADD\FINAL\291_BASE.DWG

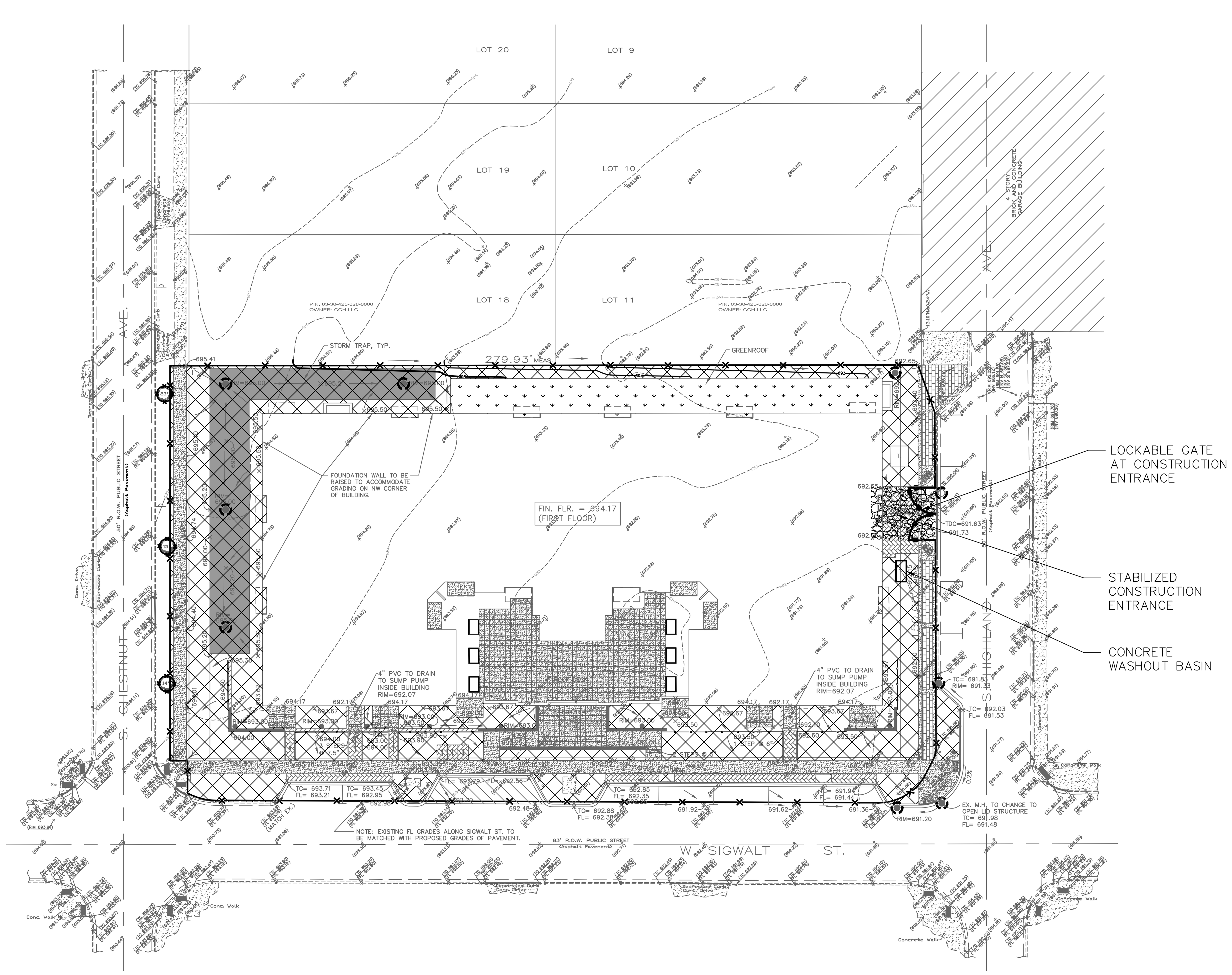

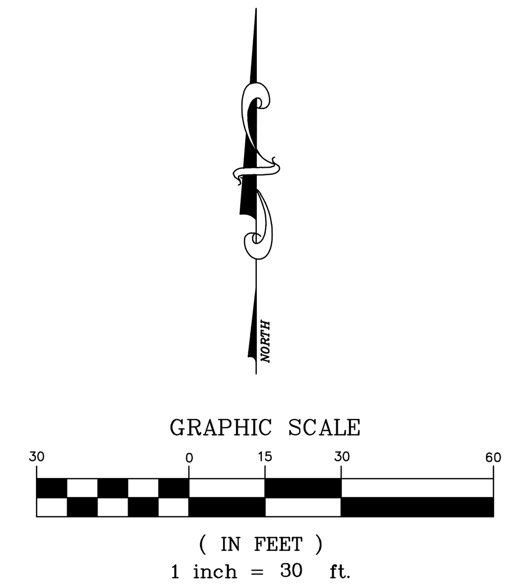

SPECIAL CONCRETE WASHOUT NOTE:

CONCRETE WASHOUT SHALL BE CONTAINED AT ALL TIMES. WASHOUT MATERIAL SHALL NOT BE ALLOWED TO ENTER STORM SEWERS OR LEACH INTO THE SOIL UNDER ANY CIRCUMSTANCES. ALL WASTE SHALL BE DISPOSED OF PROPERLY AND THE LOCATION OF THE WASHOUT SHALL BE DESIGNATED WITH PROPER SIGNAGE (SEE PLAN).

CATCH-ALL

Inlet Protection Device

HANES® GEO COMPONENTS™ A Leggett & Platt COMPANY

Catch-All is a storm drain system inlet protection device designed to filter most construction site pollutants from stormwater runoff before they enter the drain system. Custom fitted to meet virtually any structure and inlet casting/grate combination, the sturdy metal frame fits under the grate without appreciably changing the grate height – no concerns for street cleaning and plowing crews. The durable frame is reusable – project after project. The filter bag has two layers: a high flow, small pore-opening, non-woven geotextile inner layer, supported by a strong, polyester net outer layer. A stainless band with a worm-screw clamp secures the reusable, replaceable filter bag to the lower frame ring. Unique and critically important, the two-ring frame design provides an overflow capacity greater than the grate flow rate, all but eliminating any potential for a water back-up and site flooding condition, even with a fully loaded filter.

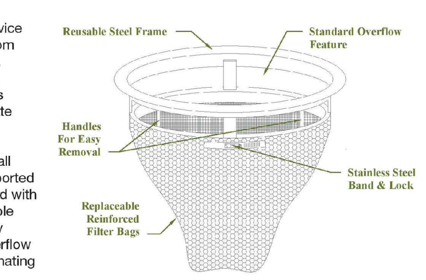

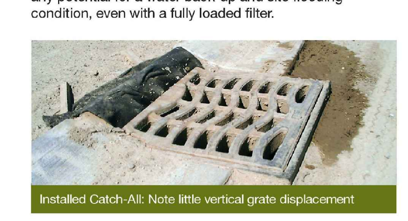
Installed Catch-All: Note little vertical grate displacement

Installed Catch-All: Note overflow opening

Catch-All Features:

- Low initial cost for reusable metal frame, filter bag with integral band
- Easy to install and maintain
- Filter bags are replaceable
- Overflow capacity exceeds grate inlet flow rate
- Minimum 2 cubic feet of pollutant storage capacity
- Initial filtration down to 70 microns, with a flow rate of 145 gal/min/ft²

CATCH-ALL GEOTEXTILE CHARACTERISTICS

Property	Test Method	Units	MARV
Grab Tensile	ASTM D-4632	lbs	100
Grab Elongation	ASTM D-4632	%	50
Trap Tear	ASTM D-4533	lbs	45
Puncture	ASTM D-4833	lbs	65
Mullen Burst	ASTM D-3786	psi	225
Permittivity	ASTM D-4491	sec⁻¹	2.0
Water Flow	ASTM D-4491	gpm/ft²	145
AOS	ASTM D-4751	U.S. Std	70
UV Resistance	ASTM D-4355	%/hrs	70/500

The information presented herein is, to the best of our knowledge, true and accurate. No warranty or guarantee, expressed or implied, is made regarding the performance of any product, since the manner of use and handling are beyond the control of Hanes Geo Components. Nothing contained herein is to be construed as permission or as a recommendation to infringe on a patent.

HanesGeo.com

Metro Grand Rapids, MI
425 36th Street SW, Wyoming, MI 49548-2108
Toll free: 800.248.8230

Metro Detroit, MI
29165 Wall Street, Wixom, MI 48393-3525
Toll free: 866.960.4300

SILT FENCE

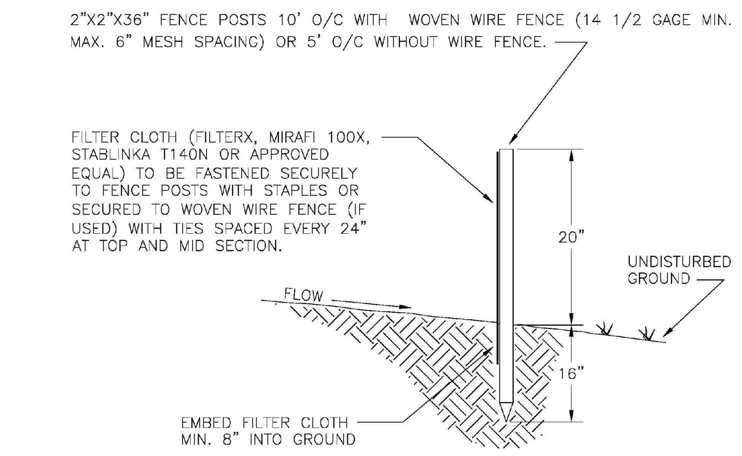

SILT FENCE SHALL BE INSTALLED AND INSPECTED BY HANOVER PARK ENGINEERING DEPARTMENT PERSONNEL PRIOR TO ANY OTHER CONSTRUCTION

WHEN TWO SECTIONS OF FILTER CLOTH ADJOIN EACH OTHER THEY SHALL BE OVERLAPPED BY 6" AND FOLDED.

TOPSOIL STOCKPILES SHALL HAVE DIVERSION DITCHES PLACED AROUND THEM WITH A SILT TRAP BUILT AT THE LOW POINT OF THE DITCHES

SILT FENCE TO BE PROVIDED AROUND ENTIRE PERIMETER OF ALL WETLAND AREAS PRIOR TO MASS EARTHWORK START.

MAINTENANCE SHALL BE PERFORMED AS NEEDED AND MATERIAL REMOVED WHEN "BULGES" DEVELOP IN SILT FENCE.

Z:\acaddata\dwg\Standard details\Std Silt Fence.dwg

SOIL EROSION CONTROL CONSTRUCTION SCHEDULE:

1. INSTALL SEDIMENT CONTROL MEASURES
   INLET BASKETS/BARIER FILTERS
2. SITE DEMOLITION WORK
   SAWCUT/REMOVE PAVEMENT/SIDEWALKS/CURBS/CONCRETE SLABS
3. SITE CONSTRUCTION WORK
   INSTALL BUILDING EXPANSION FOUNDATION/WALLS
   INSTALL CANOPY UNDERDRAIN SYSTEM & OUTFALL SEWER
   PREPARE SUBGRADE FOR BLDG FLOOR SLAB & PAVT AREAS
   INSTALL BASE COURSE MATERIALS
   INSTALL NEW CURB/SIDEWALK/CANOPY CONCRETE SLABS
   INSTALL NEW ASPHALT PAVEMENT
   REPAIR & SEALCOAT EXISTING ASPHALT PAVEMENT & RE-STRIPE
4. PERMANENT VEGETATIVE STABILIZATION OF DISTURBED GREENSPACE
   SPREAD TOPSOIL IN NEW ISLAND
   MULCH/SEED AS SPECIFIED
5. CLEANUP/RESTORATION
   REMOVE INLET BASKETS/BARRIER FILTERS

SESC INSPECTION SCHEDULE:

1. DIVERSION AND STRUCTURAL MEASURES – WILL BE INSPECTED AT 7 DAY INTERVALS AND AFTER EVERY 1/2" RAIN.
2. SEDIMENT BASINS AND PONDS – WILL BE CHECKED AFTER EACH MAJOR PHASE OF THE DEVELOPMENT FOR SEDIMENT ACCUMULATION.
3. VEGETATIVE PLANTINGS – SPRING PLANTINGS WILL BE CHECKED DURING SUMMER OR EARLY FALL.
4. REPAIRS – ANY EROSION CONTROL MEASURES, STRUCTURAL MEASURES OR OTHER RELATED ITEMS IN NEED OF REPAIR WILL BE MADE WITHIN 15 DAYS. OR EARLIER IF POSSIBLE BASE ON FIELD CONDITIONS.
5. MOWING – DRAINAGEWAYS, DITCHES AND OTHER AREAS THAT SUPPORT A DESIGNATED FLOW OF WATER WILL BE MOWED REGULARLY TO MAINTAIN THAT FLOW.
6. FERTILIZATION – SEEDED AREAS WHERE THE SEED HAS NOT PRODUCED A GOOD COVER WILL BE INSPECTED AND FERTILIZED IF NECESSARY.

EROMS-02

SOIL EROSION AND SEDIMENT CONTROL NOTES:

1. VEGETATIVE AND STRUCTURAL EROSION CONTROL MEASURES SHALL BE CONSTRUCTED AND MAINTAINED IN ACCORDANCE WITH SPECIFICATIONS AS OUTLINED IN THE "ILLINOIS URBAN MANUAL.
2. EROSION CONTROL MEASURES SHALL BE MAINTAINED AND FUNCTIONAL THROUGHOUT THE CONSTRUCTION PROJECT (MAINTENANCE AND/OR REPLACEMENT COST IS INCIDENTAL).
3. EROSION CONTROL MEASURES SHALL BE INSTALLED IN STRICT COMPLIANCE WITH CONSTRUCTION SEQUENCE (SEE SCHEDULE).
4. ALL SITE RUNOFF SHALL BE ROUTED THROUGH TRAPS AND SILTATION CONTROL DEVICES PRIOR TO DISCHARGE DOWNSTREAM/OFFSITE.
5. INLET PROTECTION FILTER BASKETS SHALL BE INSTALLED UNDER THE GRATING OF EACH DRAINAGE STRUCTURE.
6. ALL DEWATERING OPERATIONS SHALL BE DISCHARGED INTO SEDIMENT BASINS OR SILT TRAPS. DEWATERING DISCHARGE DIRECTLY INTO FIELD TILE OR STORM SEWER IS PROHIBITED.
7. DUST CONTROL SHALL BE PERFORMED ON A DAILY BASIS USING EQUIPMENT SPECIFICALLY DESIGNED FOR THAT PURPOSE.
8. SEDIMENT REACHING A PUBLIC ROAD SHALL BE REMOVED ON A DAILY BASIS.
9. LOOSE MATERIAL DEPOSITED IN THE FLOW LINE OF ANY GUTTER OR DRAINAGE DITCH SHALL BE REMOVED ON A DAILY BASIS.
10. THE CONTRACTOR SHALL INSPECT ALL EROSION CONTROL MEASURES AT LEAST ONCE EVERY SEVEN (7) DAYS AND WITHIN 24 HOURS AFTER A STORM EVENT OF 0.5 INCHES OR GREATER (OR THE EQUIVALENT SNOWFALL). REPAIRS OR CLEANUP TO MAINTAIN THE EFFECTIVENESS OF SAID MEASURES SHALL BE IMMEDIATE.
12. ALL EROSION AND SEDIMENTATION CONTROL MEASURES SHALL BE REMOVED AND DISPOSED OF IN ACCORDANCE WITH JURISDICTIONAL GOVERNMENTAL AGENCY REQUIREMENTS WITHIN THIRTY (30) DAYS OF FINAL SITE STABILIZATION.

EROSION BLANKET PLAN

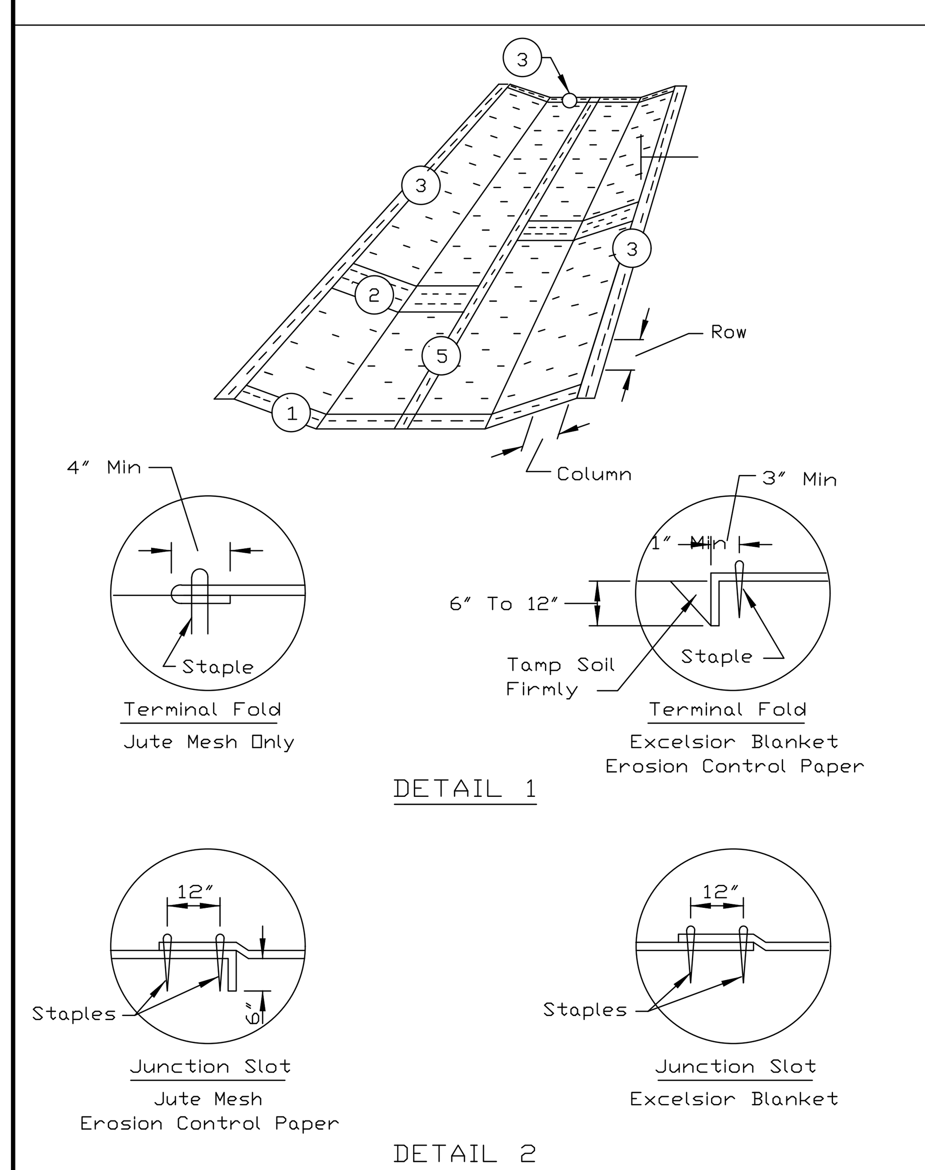

REFFERENCE		STANDARD DWG. NO.
Project ______	NRCS Natural Resources Conservation Service	IL-530
Designed ______ Date ______		SEEET 1 OF 2
Checked ______ Date ______		DATE 5-24-94
Approved ______ Date ______		

EROSION BLANKET PLAN

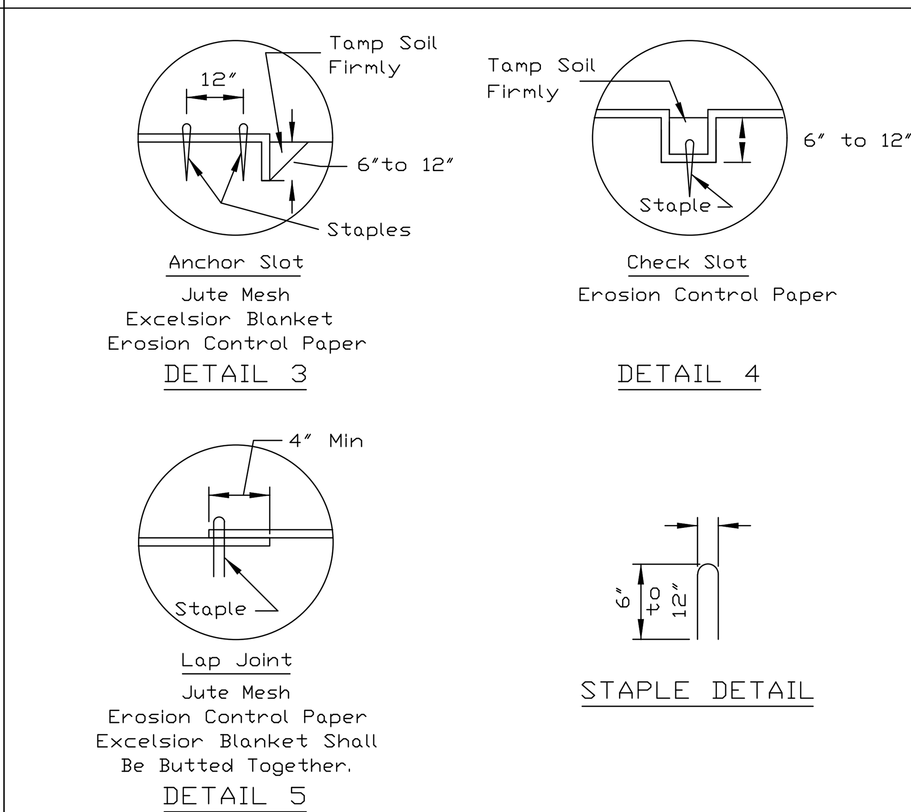

NOTES:

1. On erosion control paper, check slots, in ditch channel shall be spaced so that one occurs within each 50' on slopes of more than 4% and less than 6%. On slopes of 6% or more, they shall be spaced so that one occurs within each 25'.
2. Staples are to be placed alternately, in columns approximately 2' apart and in rows approximately 3' apart. Approximately 175 staples are required per 4'x 225' roll of material and 125 staples are required per 4'x 150' roll of material.
3. Erosion control material shall be placed loosely over ground surface. Do not stretch.
4. All terminal ends and transverse laps shall be stapled at approximately 12" intervals.

REFFERENCE		STANDARD DWG. NO.
Project ______	NRCS Natural Resources Conservation Service	IL-530
Designed ______ Date ______		SHEET 2 OF 2
Checked ______ Date ______		DATE 3-1-95
Approved ______ Date ______		

STABILIZED CONSTRUCTION ENTRANCE PLAN

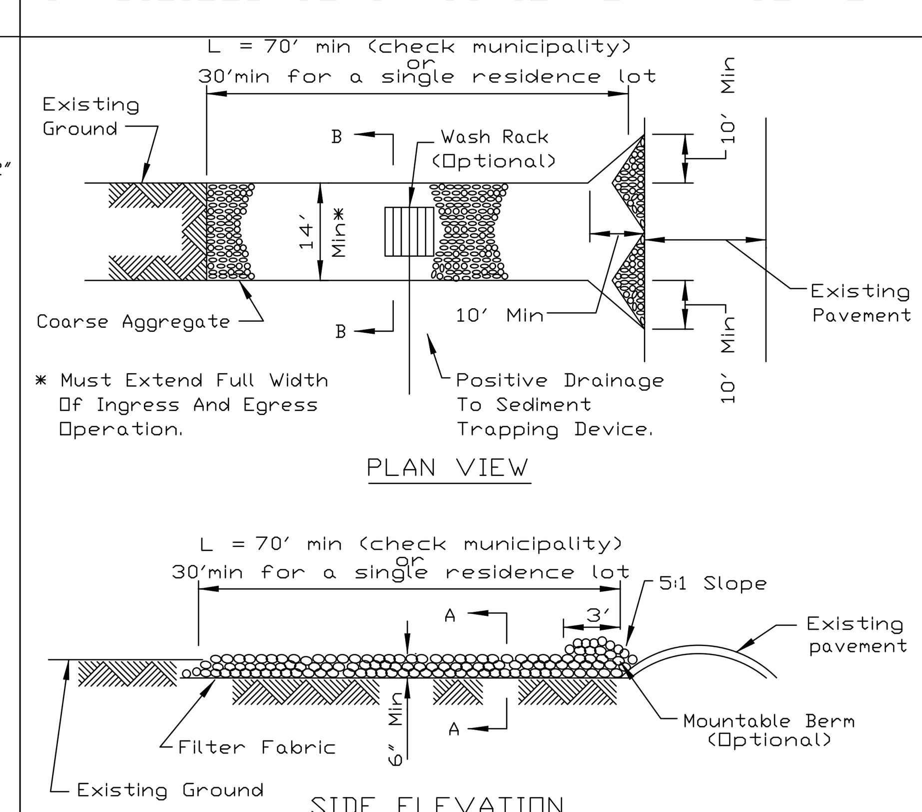

NOTES:

1. Filter fabric shall meet the requirements of material specification 592 GEOTEXTILE, Table I or 2, Class I, II or IV and shall be placed over the cleared area prior to the placing of rock.
2. Rock or reclaimed concrete shall meet one of the following IDOT coarse aggregate gradation, CA-1, CA-2, CA-3 or CA-4 and be placed according to construction specification 25 ROCKFILL using placement Method 1 and Class III compaction.
3. Any drainage facilities required because of washing shall be constructed according to manufacturers specifications.
4. If wash racks are used they shall be installed according to the manufacturer's specifications.

REFERENCE		STANDARD DWG. NO.
Project ______	NRCS Natural Resources Conservation Service	IL-630A
Designed ______ Date ______		SHEET 1 OF 2
Checked ______ Date ______		DATE 8-18-94
Approved ______ Date ______		

STABILIZED CONSTRUCTION ENTRANCE PLAN

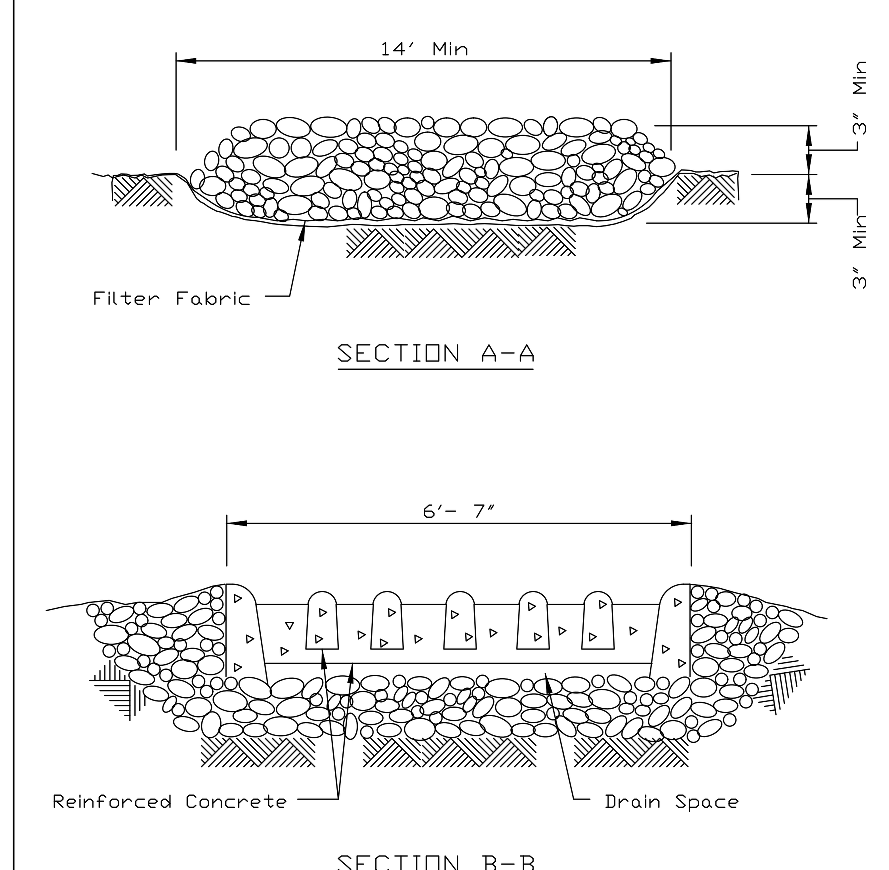

REFERENCE		STANDARD DWG. NO.
Project ______	NRCS Natural Resources Conservation Service	IL-630B
Designed ______ Date ______		SHEET 2 OF 2
Checked ______ Date ______		DATE 8-18-94
Approved ______ Date ______		

EROSION CONTROL LEGEND

- STORM DRAINAGE STRUCTURE
- INLET PROTECTION
- TREE PROTECTION FENCE
- SILT FENCE & CHAIN-LINK FENCE
- TEMPORARY SEEDING AND EROSION CONTROL BLANKET (LANDSCAPING/SOD TO FOLLOW)

PLAN ABBREVIATION LEGEND
(IN ADDITION TO TITLE SHEET)

P	=	PAVEMENT
R	=	RIM (OR RADIUS)
TC	=	TOP OF CURB
SW	=	WALK (OR TOP OF WALK)
FF	=	FINISHED FLOOR
EP	=	EDGE OF PAVEMENT
FL	=	FLOW LINE
TW	=	TOP OF WALL ELEV
BW	=	BOTTOM OF WALL (GRADE) ELEV
TDC	=	TOP OF DEPRESSED CURB

February 13, 2018 2:22:15 p.m. AcadVer: 22.0s (LMS Tech)
Drawing: S:\29112716 – ARLINGTON HTS APARTMENTS\300_ENGINEERING\310_CADD\FINAL\291_BASE.DWG

	DATE	REVISIONS	DRAWN BY
1.	08/16/17	VILLAGE REVISIONS	ZRN
2.	09/06/17	VILLAGE REVISIONS	TLM
3.	12/15/17	VILLAGE/CLIENT REVISIONS	TLM
4.	01/26/18	VILLAGE REVISIONS	TLM
5.	02/13/18	CLIENT REVISIONS	AVS

© COPYRIGHT 2017

SIGWALT STREET APARTMENTS
ARLINGTON HEIGHTS, ILLINOIS
SOIL EROSION AND SEDIMENT CONTROL (SESC) PLAN

RWG Engineering, LLC
Civil Engineering ◆ Real Estate Consulting ◆ Project Management
975 E. 22nd St, Suite 400
Wheaton, IL 60189
630.480.7889
www.rwg-engineering.com

PROJECT NO. 29112716
DATE 07/10/17
SCALE 1"=30'
PROJ. MGR. RWG
PROJ. ASSOC. MRM
DRAWN BY ZRN

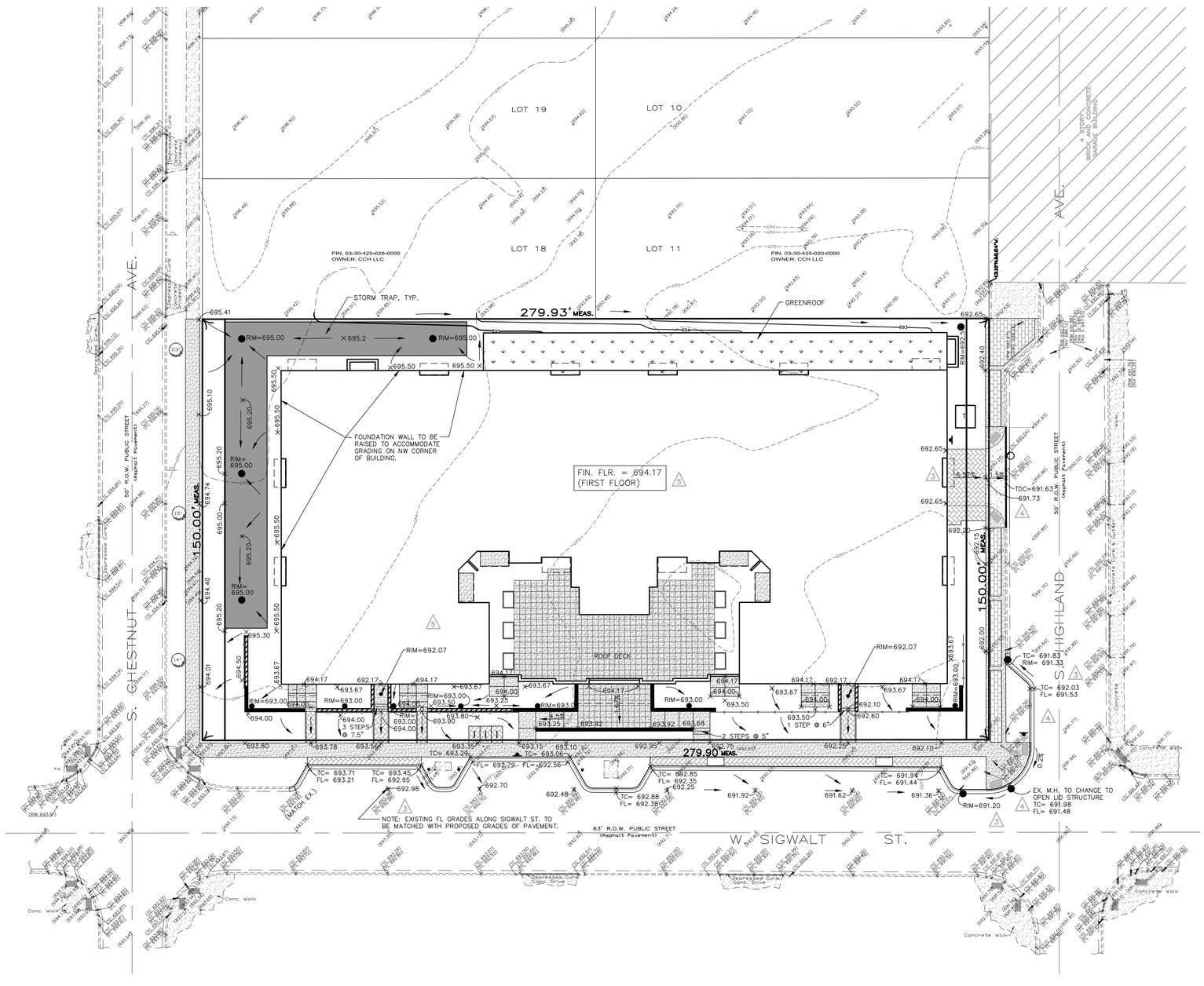

GRAPHIC SCALE

20 0 10 20 40

(IN FEET)
1 inch = 20 ft.

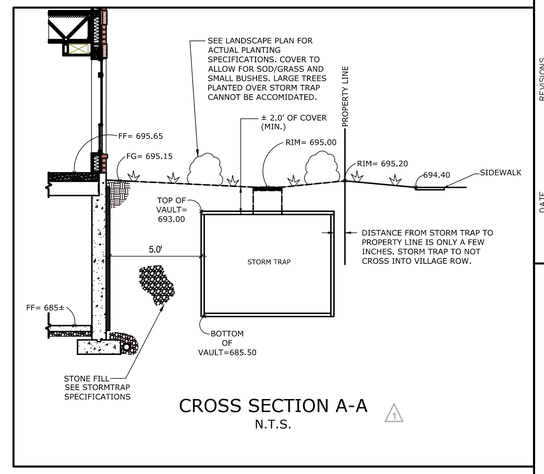

CROSS SECTION A-A
N.T.S.

GRADING NOTES:

1. PAVEMENT SLOPES WITHIN HANDICAP ACCESSIBLE PARKING AREAS SHALL NOT EXCEED 2.00% IN ANY DIRECTION.
2. HANDICAP RAMPS SHALL BE CONSTRUCTED WITH A CROSS SLOPE NOT TO EXCEED 2.00%
3. UNLESS SPECIFICALLY INDICATED OTHERWISE, EXISTING GRADES ARE TO BE MET AT PROJECT PERIMETER LINES.
4. THE CONTRACTOR SHALL REFER TO THE SOIL EROSION AND SEDIMENT CONTROL PLANS AND DETAILS (AND SWPPP DOCUMENTS IF APPLICABLE) FOR THE INSTALLATION OF EROSION CONTROL MEASURES PRIOR TO BEGINNING GRADING OPERATIONS.
5. UNLESS OTHERWISE NOTED, SPOT ELEVATIONS AND PROPOSED CONTOURS REFLECT THE FINISHED PAVEMENT SURFACE GRADE, TOP OF CURB GRADE, OR FINISHED GROUND ELEVATION AS APPLICABLE.
6. RIM GRADES FOR DRAINAGE STRUCTURES REFLECT THE FLOW LINE ELEVATION OF THE GUTTER, PAVEMENT OR DRAINAGE SWALE (AS APPLICABLE).
7. WHEREVER THE DESIGN FOR SURFACE FLOW OF DRAINAGE IS DIRECTED AWAY FROM A CURB, THE CONTRACTOR SHALL INSTALL REVERSE GUTTER PITCH.

GRADING LEGEND

	EXISTING	PROPOSED
CONCRETE HEADWALL		
PRECAST FLARED END SECTION		
STORM DRAINAGE STRUCTURE		
RETAINING WALL		
CONTOUR	749	749
5' CONTOUR	750	750
SPOT ELEVATION	×(750.00)	×750.00
DIRECTION OF SURFACE FLOW		
DITCH OR SWALE		
OVERFLOW RELIEF ROUTING		
SLOPE BANK		
RR-3 ROCK RIP-RAP		

DATE	REVISIONS	DRAWN BY
1. 08/16/17	VILLAGE REVISIONS	ZRN
2. 09/06/17	VILLAGE REVISIONS	TLM
3. 12/15/17	VILLAGE/CLIENT REVISIONS	TLM
4. 01/26/18	VILLAGE REVISIONS	TLM
5. 02/13/18	CLIENT REVISIONS	AVS

SIGWALT STREET APARTMENTS
ARLINGTON HEIGHTS, ILLINOIS
GRADING PLAN

RWG Engineering, LLC
Civil Engineering ◆ Real Estate Consulting ◆ Project Management
975 E. 22nd St. Suite 400
Wheaton, IL 60189
630.480.7889
www.rwg-engineering.com

PROJECT NO. 29112716
DATE 07/10/17
SCALE 1"=20'
PROJ. MGR. RWG
PROJ. ASSOC. MRM
DRAWN BY ZRN

SHEET
5 OF 9

© COPYRIGHT 2017

February 14, 2018 10:52:31 a.m. AcadVer:22.0s (LMS Tech)
Drawing: S:\29112716 – ARLINGTON HTS APARTMENTS\300_ENGINEERING\310_CADD\FINAL\291_BASE.DWG

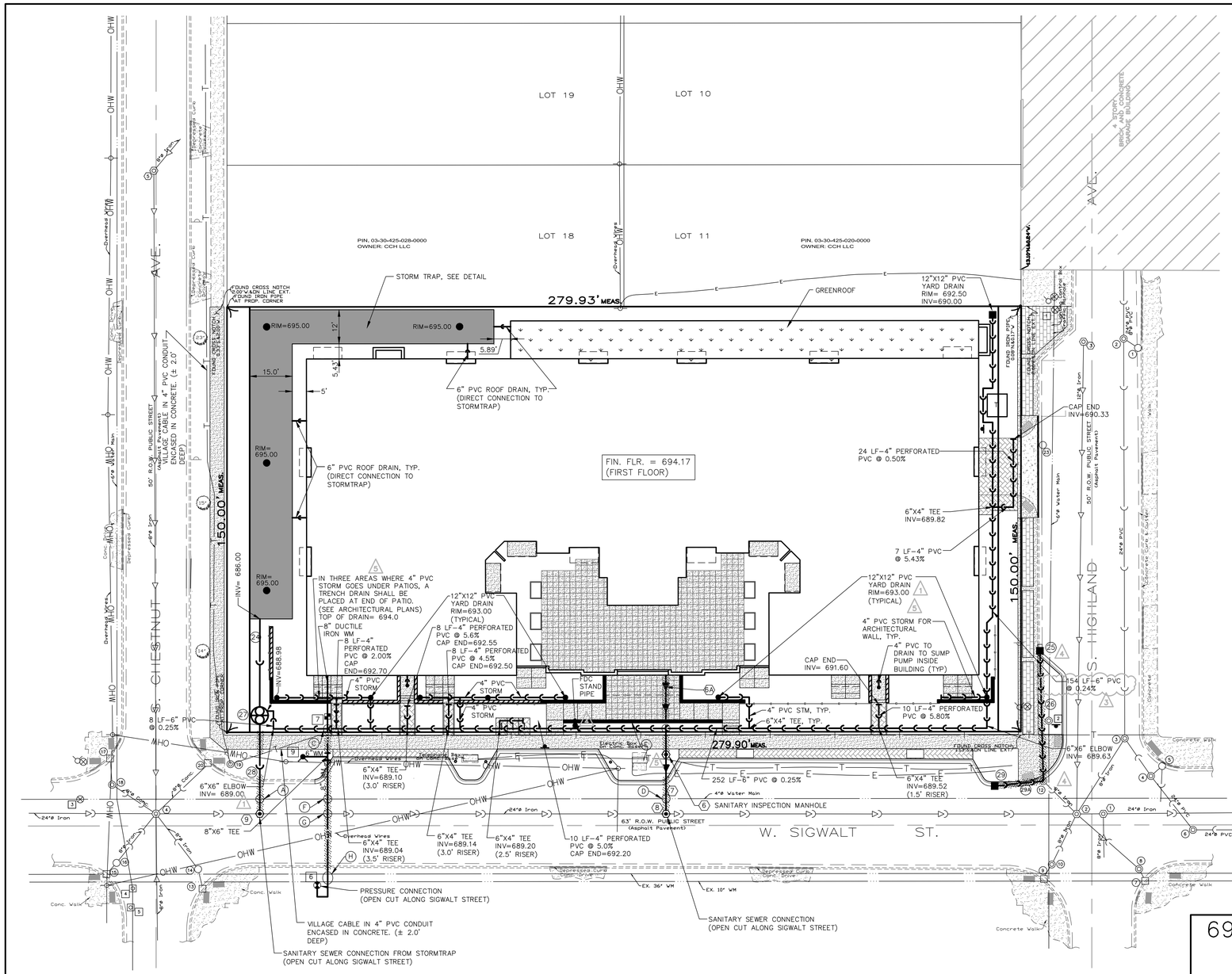

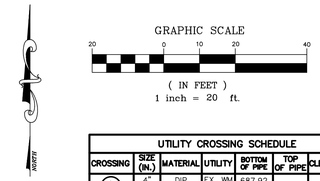

UTILITY CROSSING SCHEDULE

CROSSING	SIZE (IN.)	MATERIAL	UTILITY	BOTTOM OF PIPE	TOP OF PIPE	CLEARANCE
A	4"	DIP	EX. WM	687.92		0.64'
	18"	DIP	STM		687.28	
B						
C	6"	PVC	STM	689.03		
	8"	DIP	WM		687.53	1.50' DEPRESS WM
D	4"	DIP	EX. WM	686.87		
	8"	DIP	SAN		685.94	0.93'
E	6"	PVC	STM	689.33		
	8"	DIP	SAN		686.64	2.69'
F	4"	DIP	EX. WM	687.75		
	8"	DIP	WM		686.25	1.50' DEPRESS WM
G	24"	DIP	EX. STM/ SAN.	685.22		
	8"	DIP	WM		683.72	1.50' DEPRESS WM
H	36"x10"	DIP	EX. WM	686.08±*		
	8"	DIP	WM		684.58±	1.50' DEPRESS WM

*(PIPES TO BE V.I.F.)

UTILITY NOTES:

1. RIM GRADES FOR DRAINAGE STRUCTURES REFLECT THE FLOW LINE ELEVATIONS OF THE GUTTER, PAVEMENT, OR DRAINAGE SWALE (AS APPLICABLE)
2. UNLESS OTHERWISE NOTED, ALL UTILITY DIMENSIONS ARE CENTER TO CENTER OF STRUCTURES (OR TO END OF FLARED END SECTION – IE INCLUDING LENGTH OF FLARED END SECTION)
3. THE CONTRACTOR SHALL ADJUST RIM ELEVATIONS OF ALL EXISTING STRUCTURES TO THE PROPOSED GRADES AS INDICATED ON THE PLANS.
4. CONNECTIONS TO EXISTING SEWERS OR WATERMAINS (OR EXISTING SERVICE STUBS) AT POINTS OTHER THAN VISIBLE STRUCTURES ARE APPROXIMATE. THE CONTRACTOR SHALL EXCAVATE AND VERIFY EXISTING SEWER OR WATERMAIN LOCATIONS, SIZES, ELEVATIONS, AND PIPE CONDITIONS AT PROPOSED CONNECTION POINTS PRIOR TO CONSTRUCTING UTILITY EXTENSIONS, AND NOTIFY THE ENGINEER AND OWNER OF ANY CONFLICT OR DISCREPANCIES.
5. EXISTING UNDERGROUND PIPE, CONDUIT AND/OR CABLES (LIGHTING, ELECTRIC, GAS, CABLE, ETC) ARE SHOWN FROM RECORD INFORMATION AND ARE APPROXIMATE IN NATURE. THE CONTRACTOR SHALL VERIFY EXACT LOCATION IN THE FIELD AND NOTIFY THE ENGINEER AND OWNER OF ANY CONFLICT.
6. SELECT GRANULAR TRENCH BACKFILL IS REQUIRED FOR ALL UTILITY TRENCHES UNDER EXISTING OR PROPOSED PAVEMENT, DRIVEWAYS, PARKING LOTS, AND SIDEWALKS, AND EXTENDED A MINIMUM OF 2' EACH SIDE OF SAME. GRANULAR TRENCH BACKFILL SHALL BE COMPACTED IN PLACE IN ACCORDANCE WITH THE SPECIFICATIONS.
7. BUILDING DIMENSIONS AND ADJACENT UTILITY SERVICE LOCATIONS HAVE BEEN PREPARED BASED UPON ARCHITECTURAL INFORMATION CURRENT AT THE TIME OF DRAWING PREPARATION. SUBSEQUENT ARCHITECTURAL CHANGES MAY EXIST. THE CONTRACTOR SHALL REFER TO THE CURRENT ARCHITECTURAL PLANS FIRST, FOR PRECISE BUILDING DIMENSIONS AND UTILITY SERVICE CONNECTION LOCATIONS AND NOTIFY THE ENGINEER AND ARCHITECT OF ANY DISCREPANCIES PRIOR TO CONSTRUCTION.
8. ROUTING OF GAS, ELECTRIC, TELEPHONE AND OTHER CABLE SERVICES (IF SHOWN) ARE APPROXIMATE AND SUBJECT TO MODIFICATION BY THE RESPECTIVE UTILITY COMPANY AND/OR DEVELOPER. THE CONTRACTOR SHALL COORDINATE THE FINAL UTILITY SERVICE LOCATION WITH EACH UTILITY COMPANY PRIOR TO CONSTRUCTION.
9. 4" PVC STORM FOR ARCHITECTURAL WALL TO BE A MINIMUM OF 12" DEEP AND HAVE A MINIMUM SLOPE OF 1.0%. DIRECT CONNECTION MADE TO 6" PVC STORM SEWER WITH 6"X4" TEE. 4" PVC STORM TO CROSS ABOVE ARCHITECTURAL WALL FOOTING.
10. ALL METHODS OF CONSTRUCTION AND MATERIALS MUST CONFORM TO THE MOST RECENT VERSION (DATED PRIOR TO THE APPROVAL DATE OF THIS PLAN SET) OF "A MANUAL OF PRACTICE FOR THE DESIGN OF PUBLIC AND PRIVATE IMPROVEMENTS" AS PUBLISHED BY THE VILLAGE OF ARLINGTON HEIGHTS ENGINEERING DEPARTMENT.
11. THE WATERMAIN SHOULD BE ZINC COATED D.I.P. AND SHOULD BE WRAPPED IN "V-BIO" POLY ETHYLENE WRAPPING.

(2) SANITARY STRUCTURE NUMBER
(11) STORM STRUCTURE NUMBER
(5) WATERMAIN STRUCTURE NUMBER

STORM SEWER DRAINAGE STRUCTURE LEGEND

EXISTING	PROPOSED	
□	■	STORM INLET – OPEN GRATE
○	●	STORM CATCH BASIN – OPEN GRATE
◎	◉	STORM MANHOLE – CLOSED LID

UTILITY STRUCTURE SCHEDULE

SANITARY SEWER STRUCTURES

(1) EX SAN M.H. RIM= 691.91 INV= 684.56 (8" S) INV= 684.26 (24" W) INV= 684.21 (24" E)	(2) EX SAN M.H. RIM= 691.94 INV= 686.99 (8" NE) INV= 687.04 (8" SE) INV= 688.49 (8" SW) INV= 686.84 (8" NW) INV= 684.39 (24" W) INV= 684.29 (24" E)
(3) EX SAN M.H. RIM= 692.02 INV= 686.12 (12" S)	(4) EX SAN M.H. RIM= 693.95 INV= 689.85 (8" SE) INV= 685.75 (8" S) INV= 689.43 (8" SW) INV= 689.55 (8" NW) INV= 687.25 (8" N) INV= 690.00 (8" NE) INV= 685.60 (24"W) INV= 685.40 (24"E)
(5) EX SAN M.H. RIM= 696.21 INV= 690.76 (8" NE) INV= 688.73 (8" S)	(6) SAN INSPECTION M.H. 48" DIA, TYP. A RIM= 692.90 INV= 685.72 (1)(5)
(7) 19 LF – 8" DIP, CL52 SAN @ 4.74% (2)(5) (1)	(8) SAN M.H. 60" DIA, TYP. A (3) RIM= ±692.70 (2) (1) PROP. INV= 685.00 EX. INV= ±684.82
(9) SAN MH. 60" DIA, TYP. A (3) RIM= ±693.55 (2) INV= 685.75 (1) EX INV=±685.29 (24" PIPE)	(6A) 28 LF – 8" DIP CL52 SAN @ 1.00% INV @ BLDG.= 686.00 (2)(5)

STORM SEWER STRUCTURES

(1) EX STM C.B. RIM= 691.76 INV= 690.26 (8" NW)	(2) EX STM M.H. RIM= 691.88 INV= 687.08 (24" N) INV= 689.30 (8" E) INV= 687.03 (24" S)
(3) EX STM M.H. RIM= 691.49 INV= 686.67 (24" SE) INV= 686.09 (8" SW) INV= 686.59 (24" N)	(4) EX STM M.H. RIM= 691.33 INV= 686.73 (24" NW) INV= 686.53 (24" SE)
(5) EX STM C.B. RIM= 691.07 INV= 688.97 (24" SW) INV= 688.91 (24" S)	(6) EX STM M.H. RIM= 691.83 INV= 687.03 (24" E) INV= 686.83 (24" NW)
(7) EX STM INLET RIM= 691.26 INV= 688.40 (8" NW)	(8) EX STM M.H. RIM= 691.55 INV= 688.50 (8" SE) INV= 688.30 (8" NW)
(9) EX STM INLET RIM= 691.34 INV= 688.54 (8" NE)	(10) EX STM M.H. RIM= 691.53 INV= 688.51 (8" NE)
(11) EX STM INLET RIM= 690.97 INV= 688.27 (8" E)	(12) EX STM M.H. (OPEN LID) RIM= 691.48 INV= 688.03 (8" W,SE,N) (4)
(13) EX STM INLET RIM= 692.87 INV= 689.97 (8" N)	(14) EX STM C.B. RIM= 693.24 INV= 690.04 (8" SE) INV= 689.84 (8" NW)
(15) EX STM INLET RIM= 693.28 INV= 690.48 (8" NE)	(16) EX STM C.B. RIM= 693.50 INV= 690.40 (8" SW) INV= 690.20 (8" NE)
(17) EX STM INLET RIM= 693.30 INV= 691.05 (8" S)	(18) EX STM M.H. RIM= 693.68 WATER FILLED T/ WATER= 690.03
(19) EX STM M.H. RIM= 693.70	(20) EX STM INLET RIM= 693.44 END OF PIPE SEALED
(21) EX STM C.B. RIM= 691.68 UNABLE TO OPEN INV= 688.88 (8" SE)	(22) EX STM C.B. RIM= 691.50 UNABLE TO OPEN INV= 688.85 (8" S)
(23) EX STM C.B. RIM= 691.52 WATER FILLED T/WATER= 687.67	(24) 30 LF – 18" RCP CL IV @ 0.15%
(25) 24" DIA. INLET RIM= 691.33 INV=688.33 (4)	(26) 46 LF – 8" PVC AWWA C900 WM QUALITY PIPE @ 0.65% (4)
(27) SPECIAL RESTRICTOR STRUCTURE, SEE DETAIL (1) (3) 72" DIA, TYP. C RIM= 694.00 INV=685.95 INV=686.00 (S) *SEE CHECK VALVE DETAIL; INSTALLED ON DOWNSTREAM PIPE	(28) 31 LF – 18" DIP, CL52 (2) @ 0.81% (29A) 17 LF – 8" RCP CL IV (4) @ 0.82% (29) 24" DIA. INLET (3)(4) RIM= 691.20 INV=688.17

WATERMAIN STRUCTURES

(1) EX VALVE VAULT RIM= 692.67 T/P= 688.02	(2) EX WATER M.H. RIM= 691.18 WATER FILLED T/WATER= 689.18
(3) EX VALVE VAULT RIM= 693.91	(4) EX CLEANOUT RIM= 693.53 T/P= 688.38
(5) EX CLEANOUT RIM= 693.55 T/P= 688.35	(6) 8" VALVE IN 60" VAULT PRESSURE CONNECTION TO EXISTING 10" WM. RIM= ±693.80
(7) 8" DUCTILE IRON WM, CL 52 WITH 8" SERVICE VALVE AND BOX. RIM= 693.70 (2)	(8) 6" DUCTILE IRON WM, CL 52 WITH 6" SERVICE VALVE & BOX (DOMESTIC SUPPLY LINE) RIM= 693.80
(9) PROPOSED FIRE HYDRANT RING ELEV= 693.6 (1)	

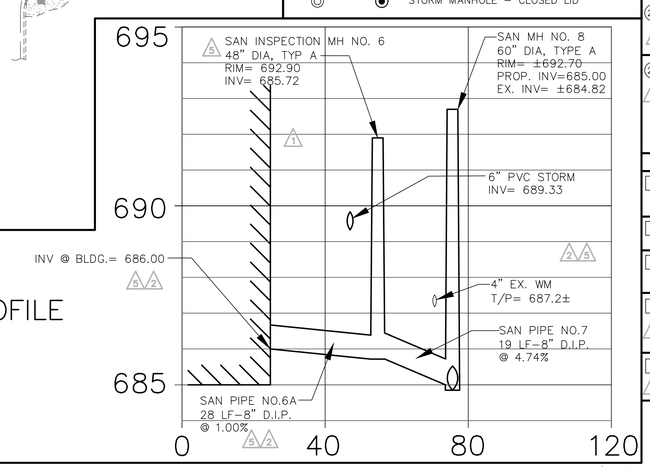

SANITARY SEWER PROFILE
H: 1"=20'
V: 1"=2'

DATE	REVISIONS	DRAWN BY
		ZRN
1. 08/16/17	VILLAGE REVISIONS	TLM
2. 09/06/17	VILLAGE REVISIONS	TLM
3. 12/15/17	VILLAGE/CLIENT REVISIONS	TLM
4. 01/26/18	VILLAGE REVISIONS	AVS
5. 02/13/18	CLIENT REVISIONS	

© COPYRIGHT 2017

SIGWALT STREET APARTMENTS
ARLINGTON HEIGHTS, ILLINOIS
UTILITY PLAN

RWG Engineering, LLC
Civil Engineering ◆ Real Estate Consulting ◆ Project Management
975 E. 22nd St. Suite 400
Wheaton, IL 60189
630.480.7889
www.rwg-engineering.com

PROJECT NO. 29112716
DATE 07/10/17
SCALE 1"=20'
PROJ. MGR. RWG
PROJ. ASSOC. MRM
DRAWN BY ZRN

SHEET 6 OF 9

February 14, 2018 11:09:5 a.m. AcadVer:22.0s (LMS Tech)
Drawing: S:\29112716 – ARLINGTON HTS APARTMENTS\300_ENGINEERING\310_CADD\FINAL\291_BASE.DWG

RWG ENGINEERING, LLC
PROJECT SPECIFICATIONS

GENERAL CONDITIONS

CONTRACT DOCUMENTS
The Standard Specifications listed on the title sheet, these Improvement Plans, the Special Provisions, General Conditions, and Subsequent Details are all part of the Contract Documents. Incidental items or accessories necessary to complete the work may not be specifically noted, but are to be considered a part of the contract.

USE OF IMPROVEMENT PLANS
No Improvement Plans shall be used for construction unless specifically marked "For Construction." Prior to commencement of construction, the contractor shall verify all dimensions and conditions affecting their work with the actual conditions at the job site. If there are discrepancies from what is shown on the construction plans, the contractor shall immediately report same to the engineer before doing any work, otherwise the contractor assumes full responsibility. In the event of disagreement between the construction plans, standard specifications, and/or special details, the contractor shall secure written instructions from the engineer prior to proceeding with any part of the work impacted by omissions or discrepancies. Failing to secure such instruction, the contractor will be considered to have proceeded at his own risk and expense. In the event of any doubt or question with respect to the true meaning of the construction plans or specifications, the decision of the engineer shall be final and conclusive.

HIGHWAY/ROADWAY CONSTRUCTION PERMITS
The contractor shall be responsible for obtaining all required permits for construction along or across existing streets or highways, including the use and access to existing streets. The contractor shall make arrangements for proper bracing, shoring, and other required protection of all roadways before construction begins. The contractor shall be responsible for any damage to streets or roadways and associated structures, and shall make repairs as necessary to the satisfaction of the engineer and applicable governmental agency.

EXISTING UTILITIES
Easements for existing utilities within public right-of-way are shown on the plans according to available records. The contractor shall be responsible for determining the exact location in the field of such utility lines and their protection from damage during construction. If existing utility lines of any nature are encountered which conflict in location or elevation with new construction, the contractor shall notify the engineer immediately so that the conflict may be resolved.

PROJECT IMPROVEMENTS AND QUANTITIES
The contractor shall review the construction documents and determine all required improvements and verify all quantities as may be provided by the engineer or owner for bidding purposes, and report any discrepancies to the engineer. The contract price submitted by the contractor shall be considered as lump sum for the completed project unless there is a plan revision or written change to the scope of work.

INCIDENTAL CONSTRUCTION
Whenever the performance of work is indicated on the plans and no item is included in the contract for payment, the work shall be considered incidental to the contract and no additional compensation will be provided.

MAINTENANCE OF SITE DRAINAGE
During construction operations any loose material that is deposited in the flow line of gutters, drainage structures, ditches, etc. and obstructs the natural drainage flow line shall be removed at the close of each working day by the responsible party. The contractor shall insure positive site drainage at the close of each work day. Drainage may be achieved by ditching, pumping, or any other acceptable method. Failure to provide positive drainage will preclude any possible added compensation requested due to delays or unsuitable materials created as a result thereafter. At the conclusion of construction operations all drainage structures and flow lines shall be free from dirt and debris. This work shall be considered incidental to the contract.

TRAFFIC CONTROL
The contractor is responsible for the installation and maintenance of adequate signage, traffic control, and warning devices to inform and protect the public during all phases of construction. All barricades and warning signs shall be provided in accordance with the IDOT Standard Specifications. Adequate lighting shall be maintained from dusk to dawn at all locations where construction operations warrant, or as designated by the engineer or applicable governmental agency. Traffic control items shall be in accordance with the IDOT "Manual on Uniform Traffic Control Devices."

PAVEMENT REMOVAL/REPLACEMENT
Existing permanent type pavements or other permanent improvements which abut or otherwise interfere with proposed improvements and must be removed shall be saw cut full depth prior to removal. Items so removed shall be replaced with similar construction materials to original condition or better. Payment for saw cutting shall be included in the removal cost and replacement will be paid under the respective item in the contract, unless otherwise indicated. Removed pavement, sidewalk, curb, etc. shall be disposed of by the contractor at his own expense at an offsite dump site.

TREE PROTECTION
Existing trees not scheduled for removal shall be protected from damage. Trimming and sealing shall be in accordance with IDOT Standard Specifications.

EXISTING SIGNAGE & MAIL BOXES
Existing signage and mail boxes that interfere with construction shall be removed, stored, and replaced/reset by the contractor in accordance with the IDOT Standard Specifications. Damage to these items shall be repaired/replaced by the contractor at his expense. Temporary mailbox facilities shall be provided as an incidental cost.

EXISITNG FIELD TILE
Field tile encountered during construction shall be connected to proposed storm sewer or extended to outlet into a proposed drainage way. If this is not possible, then existing tile shall be repaired with new pipe of same size and material (or better) and restored in acceptable operating condition at the original grade. Records of location and elevation shall be made by the contractor and furnished to the engineer upon project completion.

CONSTRUCTION DEBRIS CLEAN-UP
The contractor is responsible for removal and disposal of all excess material and debris resulting from his construction operations at no expense to the owner.

CONSTRUCTION RECORD
The contractor shall keep a set of approved construction plans on the jobsite, and shall maintain a legible record on said plans of field tile encountered, modifications/alterations to alignment/installation of proposed improvements, etc. Upon completion of the contractor's work, said record documents shall be provided to the engineer. Final payments shall not come due until this information is provided to the engineer.

SAFETY & CONSTRUCTION EXECUTION
The contractor shall comply with the rules and regulations of OSHA and appropriate authorities regarding jobsite safety provisions. The engineer and owner are not responsible for the construction means, methods, techniques, sequences or procedures, time for performance, programs, or for any safety precautions used by the contractor. The contractor is solely responsible for execution of his work in accordance with the contract documents.

INSURANCE
Contractors responsible for construction shall purchase insurance for the benefit of the engineer, naming RWG Engineering, LLC as an additional insured to cover claims and expenses, including cost of defense, asserted against engineer, it's agents, employees, and consultants for bodily injury, sickness, disease or death caused by any negligent act or omission of the contractor, any subcontractor, anyone directly or indirectly employed by them or anyone for whose acts any of them may be liable. Such insurance shall state that: "The coverage afforded the additional insured's shall be primary insurance for the additional insured with respect to claims arising out of operations performed by or on behalf of the contractor." A certificate shall be issued to the engineer prior to the start of work. Applicable insurance maintained by RWG Engineering, LLC shall be considered secondary and on an excess or contingent basis.

PROJECT SPECIFICATIONS

I. SOIL EROSIONS AND SEDIMENT CONTROL

GENERAL STANDARDS
Unless specifically modified below, all soil erosion and sediment control work shall be done in accordance with NPDES General Permit No. ILR10 and the "Illinois Urban Manual." The contractor shall conform to all requirements of this general permit including maintenance and inspection of erosion control measures and filing applicable certifications and reports. A copy of the notification of coverage letter shall be posted at the site in a prominent place for public viewing. Any control measures in addition to those outlined in these plans which are deemed necessary by the owner, engineer, or applicable governmental agency shall be immediately implemented by the contractor. Maintenance and replacement of erosion control items shall be considered incidental.

SWPPP
A copy of the Stormwater Pollution Prevention Plan (SWPPP) shall be kept onsite with all supplemental material as required per NPDES General Permit No. ILR10. Construction operations shall conform to permit requirements.

SITE PREPARATION
Prior to clearing and grading, perimeter silt fence shall be installed, and onsite sediment control measures shall be constructed and functional per the soil erosion and sediment control plan. The contractor shall construct ditches, swales, sediment traps, and siltation control measures to intercept surface waters prior to conveyance onto adjacent properties, routing surface flow to onsite treatment facilities.

STABILIZED CONSTRUCTION ENTRANCE
Temporary gravel construction entrances shall be installed and maintained to prevent sediment from being trucked offsite. Sediment reaching a public road shall be removed by shoveling or street sweeping at the end of each work day. Loose material deposited in the flow line of any gutter or drainage structure shall be removed at the end of each work day.

TOPSOIL STOCKPILES
Topsoil stockpiles shall be seeded within seven (7) calendar days of completion for erosion control, unless they will be distributed within fourteen (14) calendar days. Stockpiles shall be encompassed with a silt fence.

DUST CONTROL
Dust control shall be performed on a daily basis using water dispersed from a truck mounted tank with a standard discharge header for uniform application rate.

DE-WATERING
During de-watering operations water shall be pumped into sediment basins or silt traps. De-watering directly into field tile or stormwater structures is not permitted. Water pumped during construction operations shall be filtered.

STABILIZATION
Disturbed areas shall be stabilized by seeding within seven (7) days of completion of disturbance unless the area will be disturbed within fourteen (14) days. Temporary seed mixtures shall be applied at a rate of 64 lbs/acre.

SEDIMENT BASINS
When stormwater is routed through proposed detention basins to allow for settlement of suspended silt and debris, the basins shall be constructed at the start of the project. Basins shall be sufficiently over-excavated to provide appropriate volume for sediment collection.

STRUCTURE FILTER FABRIC
Filter fabric or inlet protection devices shall be installed in each onsite drainage structure. Fabric shall be cut large enough such that the entire grate is covered with a 24" minimum "basket" to collect sediment.

DRAINAGE SYSTEM MAINTENANCE
All storm sewers, catch basins, sumps, and detention basins provided with this project shall be cleaned at construction completion and prior to final acceptance. Cleaning may also be required during construction if the traps are not functioning properly.

INSPECTIONS
The contractor shall inspect all erosion control measures at least once every seven (7) calendar days, and within 24 hours of a storm event of 0.5 inches or greater (or equivalent snowfall) and in accordance with NPDES guidelines. Necessary repairs or clean up to maintain the effectiveness of the control measures shall be done immediately.

CLEANUP
All erosion and sediment control measures shall be removed and disposed of in accordance with applicable governmental agency requirements within 30 days of final site stabilization.

II. EXCAVATION AND GRADING - (EARTHWORK)

GENERAL STANDARDS
Unless specifically modified below, all excavation and grading - (earthwork) shall be done in accordance with the applicable sections of the "Standard Specifications for Road and Bridge Construction in Illinois," as published by IDOT, Latest Edition.

SITE PREPARATIONS
Prior to onset of operations, the contractor shall become familiar with the soil erosion control specifications. The establishment of erosion control procedures and the placement of filter fencing, etc. to protect adjacent property shall occur before mass grading begins, and in accordance with the implementation schedule.

Tree protection fencing shall be placed around any trees designated to be preserved within the construction zone. Fencing shall be placed in a circle centered around the tree, such that the entire drip zone (extent of furthest extended branches) shall be within the fence limits. The existing grade within the fenced area shall remain undisturbed.

DEMOLITION
Demolition of existing structures, pavements, curbs, flatwork, utilities, etc. shall be disposed of at an offsite dump site provided by the contractor. Existing water wells shall be closed and capped in accordance with the Illinois Water Well Construction Code, as published by the Department of Public Health. Existing septic tanks and grease traps shall have all liquids and solids removed by a licensed waste hauler prior to structure removal or filling by the contractor.

CLEARING AND GRUBBING
Unless noted for preservation, all vegetative growth including trees and tree stumps shall be removed from the construction area.

TOPSOIL REMOVAL
Topsoil shall be stripped from all roadway, driveway, parking area, right-of-way, building pad and other designated structural areas. Stockpiling of topsoil for respread shall be at locations as directed by the owner. Topsoil stockpiled for future use shall be free from large roots, sticks, weeds, brush, stones larger than one inch diameter, and other litter or waste products not conducive to plant growth. Failure to properly sequence stockpiling operations shall not constitute a claim for additional compensation. No material shall be stockpiled in front yards, drainage swales, flood routing areas, utility locations, utility easements or right-of-way.

UNSUITABLE MATERIAL
Unsuitable subgrade material shall be removed from roadway, driveway, parking lot, building pad, and any other designated areas. Obviously soft underlying soil shall be removed from all structural improvement areas, areas to receive clay fill, and wherever else designated on the site. If underlying structural subgrade soils rut deeper than one inch under construction equipment or if the moisture content exceeds that needed for proper compaction, the soil shall be scarified, dried, and recompacted to the required specifications.

EXCAVATION AND EMBANKMENT
Upon completion of topsoil removal, the contractor shall perform excavation and embankment (fill) operations in accordance with the improvement plans.

Structural embankment material shall be placed in level uniform layers so that the compacted thickness is approximately six inches. Each layer shall be thoroughly mixed during spreading to insure uniformity.

Embankment material within roadway, driveway, parking areas, and other structural clay fill areas shall be compacted to a minimum of ninety percent (90%) of maximum density (modified proctor method), or to such other density as determined appropriate by the soils engineer. Embankment for building pads shall be compacted to a minimum of ninety-five percent (95%) of maximum density (modified proctor method), or to such other density as determined appropriate by the soils engineer.

Embankment material within non-structural fill areas (random fill) shall be compacted to a minimum of eighty-five percent (85%) of maximum density (modified proctor method), or to such other density as determined appropriate by the soils engineer.

Embankment material within non-structural fill areas (random fill) required to raise the ground surface to or above the base (100 year) flood elevation shall be compacted to a minimum of ninety percent (90%) of maximum density (modified proctor method).

All subgrades for proposed street and pavement areas shall be proof-rolled by the contractor and any unstable areas shall be removed and replaced as directed by the soils engineer.

BACKFILLING CURBS, PAVEMENT, ETC.
Curbs, pavements, sidewalks, etc. shall be backfilled by the contractor after installation in accordance with the improvement plan grades.

TOPSOIL RESPREAD
Except where otherwise noted, the contractor shall respread a minimum six (6) inch layer of topsoil on all designated open space, parkway, landscape, and other non-structural areas.

EXCESS MATERIAL
Unless otherwise approved by the owner, the contractor shall remove from the site any excess or unsuitable earth material.

SEEDING
Upon completion of topsoil respread, the contractor shall install seed and fertilizer as indicated on these improvement plans or per owner provided landscape plans.

INSPECTION BY THE SOILS ENGINEER
The owner provided soils engineer shall closely supervise and inspect the grading operations, particularly during the removal of unsuitable material and the construction of embankments or building pads. All testing, inspection and supervision of embankment quality, unsuitable removal and replacement, and other soils related operations shall be entirely the responsibility of the soils engineer.

GRADING TOLERANCE
Building pad elevations, subgrades for pavement, driveways and sidewalks, and all yard/open space areas shall be completed within a tolerance of plus or minus 0.1 foot of design subgrade elevations.

UTILITY INSTALLATION PREPARATION
Prior to utility construction, proposed pavement areas, building pads, driveway and sidewalk areas, and yard/open space areas shall be rough graded to plus or minus one foot of design subgrade elevations.

NOTE REGARDING PLAN GRADES
Grade elevations shown on the improvement plans are finished grades. Pavement and/or topsoil respread thicknesses must be subtracted to determine subgrade elevations.

SITE DRAINAGE MAINTENANCE
Grading and site improvement construction shall not cause ponding of stormwater. All areas adjacent to improvements shall be graded to provide positive site drainage.

RIP RAP MATERIAL
Stone Rip-Rap material provided shall conform to IDOT specification criteria.

SUBGRADE DESIGN CRITERIA
Pavement subgrade shall have a minimum IBR of 3.0 as determined by the soils engineer. The proposed pavement design has been based on a minimum IBR of 3.0. If areas of pavement subgrade are encountered which do not meet the minimum IBR requirement, subgrade remedial work or pavement design revisions will be ordered by the owner to obtain equivalent pavement strength.

III. UNDERGROUND UTILITIES - UNIVERSAL

GENERAL STANDARDS
All sewer and water main improvements shall be constructed in accordance with the "Standard Specifications for Water and Sewer Main Construction in Illinois," Latest Edition, along with applicable sections of the "Standard Specifications for Road and Bridge Construction in Illinois" as published by IDOT, Latest Edition, and the construction details and specifications of the applicable governmental agency.

GENERAL WORK SCOPE
Underground utility construction shall include trenching or augering; installation of pipe, structures and castings; backfilling of trenches with compaction; and testing as required. Fittings and accessories necessary to complete the work may not be specified, but shall be considered incidental to the cost of the contract.

GRADE PREPARATION
Rough grading to within one foot of finished subgrade shall be completed by the earthwork contractor prior to commencement of underground utility construction.

DE-WATERING
The contractor is responsible for dewatering any excavation for the installation of sewer or water systems. Dewatering will be considered incidental to the respective underground utility construction.

SHEETING AND BRACING
Any anticipated costs for sheeting and bracing shall be reflected in the contract amounts. Additional costs for sheeting and bracing will not be allowed.

SELECT GRANULAR BACKFILL
All utility trenches beneath existing or proposed pavement, driveways and sidewalks, and existing or proposed utilities (i.e. crossings), and for a distance of three (3) feet either side of same (or more for deeper utilities as noted on the plans), and/or wherever else shown on the plans shall be backfilled with select granular material and firmly compacted in accordance with the construction standard details.

EXCESS TRENCH MATERIAL
The contractor shall spread excess excavated trench material adjacent to the trenches in an orderly fashion so as not to create a hazard or obstruction, and to maintain the site in a workable condition.

DISSIMILAR MATERIALS/PIPE CONNECTIONS
"Band-Seal" or similar flexible type couplings shall be used when connecting sewer pipes of dissimilar materials. When connection to an existing sewer main by means other than an existing wye, tee, or an existing structure, one of the following methods shall be used:
- Circular coring of sewer main with proper tools ("Shewer-Tap" machine or similar) and installation of hub-wye or hub-tee saddle
- Remove entire section of pipe (breaking only the top of one bell) and replace with precast wye or tee branch section
- Using a pipe cutter, neatly and accurately cut out desired length of pipe for insertion of proper fitting, using a non-shear mission coupling to hold assembly firmly in place

UTILITY STRUCTURE SELECT BACKFILL
Where select granular bedding and backfill is required around utility structures, the cost for same shall be merged into the structure cost.

STRUCTURE CASTINGS
Frames and lids (or grates) for sanitary, water main and storm sewer structures shall be as indicated on the plans, and the cost of same shall be integrated into the respective structure cost.

ADJUSTING RINGS
All structures shall incorporate a minimum of three (3) inches and a maximum of eight (8) inches of adjusting rings (two (2) rings maximum).

STRUCTURE ADJUSTMENT
All top of frames for utility structures (including B-Boxes) shall be adjusted to meet final finished grade upon completion of finished grading and final inspection (cost incidental). The contractor shall insure that roadway, curb, and pavement inlets or structures (frames and grates) are at finished grade.

HORIZONTAL AND VERTICAL SEPARATION OF WATER AND SEWER MAINS
Horizontal and vertical separation between water and sewer mains shall be maintained in accordance with the Standard Specifications for Water and Sewer Main Construction in Illinois and said specifications standard drawings 18, 19, 20, 21, 22, 23, and 24.

FLOOR DRAINS AND FOOTING DRAINS
All floor drains and floor drain sump pumps shall discharge into the sanitary sewer. All downspouts, footing drains and subsurface stormwaters shall discharge into the storm sewer or onto the ground - not into the sanitary sewer.

RIP RAP MATERIAL
Rip Rap material provided in conjunction with underground utility improvements shall conform to IDOT specifications.

CONSTRUCTION RECORD
The contractor shall maintain a legible record on a set of construction plans information concerning all manholes, wyes and services, valve boxes, curb boxes, etc. such that they can be field located in a manner acceptable to the applicable governmental agency.

IV UNDERGROUND UTILITIES - SANITARY SEWER

SANITARY SEWER PIPE
Sanitary sewers and services (or combined sewers in combined sewer areas) shall be constructed of one or more of the following materials as specified on the plans:

- PVC gravity sewer pipe conforming to ASTM D-3034 for pipe diameters of 4 inch to 15 inch, or conforming to ASTM F-679 for pipe diameters of 18 inch to 48 inch, with minimum SDR of 26, and with Elastomeric gasket joints conforming to ASTM D-3212. The gasket shall comply with ASTM F-477. Sanitary services shall conform to ASTM D-2680 and D-2751 with solvent cement welded joints conforming to same.
- Cement-lined ductile iron pipe class 52, conforming to AWWA C-151 (ANSI 21.51) with push-on joints conforming to AWWA C-111 (ANSI A21.11)

SANITARY SEWER BEDDING
Sanitary sewers shall be installed on compacted granular crushed stone bedding, 1/4 inch to 3/4 inch in size (IDOT gradation CA-11 or CA-13), with a minimum thickness of one fourth of the outside pipe diameter, but not less than 4 inches nor more than 8 inches. Bedding shall extend to one foot over the top of pipe for all sanitary sewer and services. Cost for bedding shall be merged into lineal footage cost for the respective sewer pipe.

SANITARY PIPE MANHOLE CONNECTIONS
Sanitary sewer manhole connections shall be made with a flexible water-tight boot precast into the structure (see construction standard detail). Refer to ASTM C-923.

SERVICE CONNECTIONS TO MAINLINE SEWER
Service connections to mainline sewer shall be done with pre-cast wyes or tees manufactured for that purpose, and shall be of the same material as the mainline sewer.

SANITARY SERVICES
Services shall be laid to a minimum grade of 1.0 percent. The end of the service shall be sealed with a watertight plug.

SERVICE LOCATIONS
Sanitary services shall be installed in a separate trench from water services, with a minimum horizontal separation of 10 feet.

V. UNDERGROUND UTILITIES - WATER MAIN

WATER MAIN PIPE
Water main shall be cement-lined ductile iron pipe class 52 conforming to AWWA C-151 (ANSI A21.51). Rubber gasket joints shall conform to AWWA C-111 (ANSI A21.11). Push-On pipe joints shall incorporate "Field Lock Gaskets" by U.S. Pipe or Series 1700 Mega-Lug. Ductile iron fittings shall conform to AWWA C-110 (ANSI A21.10). Cement lining shall conform to AWWA C-104 (ANSI A21.4). Protective wrapping is required. It shall conform to AWWA C105-99, minimum thickness 8 mill polyethylene tube such as Clow type F-191 or equal, and shall completely encase and seal the main, fittings, and accessories per manufacturer's directions.

FITTINGS
Water main fittings (bends, elbow, tees, increasers, reducers, etc.) may or may not be specifically referenced on the plans and quantities - if not, they shall be considered incidental and included in the lineal footage coast for the water main.

DEPTH OF COVER - MAIN AND SERVICES
Minimum depth of cover from finished grade to top of water main or water service pipe shall be six (6.0) feet.
THRUST BLOCKING
Thrust blocking shall be installed with water mains at all bends, tees, elbows, etc. (see construction standard detail). Retainer glands or mega-lug fittings may be substituted if permitted by the applicable governmental agency. Cost of either to be merged into lineal footage cost for the water main.

WATER MAIN BEDDING
Water main shall be installed on compacted granular crushed stone bedding, 1/4 inch to 3/4 inch in size (IDOT gradation CA-6), a minimum of 4 inches below the bottom of the pipe and extending upward to the springline (1/2 the pipe diameter). Cost for bedding shall be merged into lineal footage cost for the water main.

WATER VALVES
Unless specifically noted otherwise, gate valves in accordance with the applicable governmental standard shall be used wherever valves are called for. Valves shall be iron body, bronze mounted, parallel resilient seat valves per AWA C-509. Valves shall be rated for 300 psi test pressure and 200 psi working pressure.

VALVE VAULTS
Valve vaults shall be used at all valve locations. Vaults shall be precast reinforced concrete structures, diameter as noted on the plans. Vaults shall include appropriate frames and lids (see construction standard detail(s).

PRESSURE TAPS
Where indicated on the plan, pressure tap operations shall be done while maintaining system pressure in the existing main. The existing main shall be cleaned prior to installation of the tapping sleeve. Tapping valve shall conform to AWWA C-500. Vault, supports, frame, and lid shall conform to the construction standard detail.

FIRE HYDRANTS
Hydrants shall be of the manufacture and equipped with auxiliary valves and valve boxes in accordance with the applicable governmental agency's standard. Hydrants shall be equipped with two 2 1/2 inch hose nozzle connections and one 4 1/2 inch pumper port. Hose threads shall be the standard of the applicable governmental agency. Hydrants shall open left (counter-clockwise). Hydrants shall generally be located three (3) feet clear of the back of curb.

SERVICE LOCATIONS
Water services shall be installed in a separate trench from sanitary (or storm) services, with a minimum horizontal separation of 10 feet.

TESTING AND DISINFECTION
Water mains shall be subject to a pressure test by the contractor. Hydrostatic pressure test and leakage shall be based on 150 psi for 2 hours. Chlorination for disinfection shall be in accordance with the Standard Specifications. Testing and chlorination of existing water mains (where connections are indicated on the plans) shall be considered incidental. In the event that pressure testing of existing mains fail, and such failures are attributable to pre-existing conditions not under the contractor's control, the contractor is entitled to additional payment to correct the deficiencies in the existing system.

VI. UNDERGROUND UTILITIES - STORM SEWER

STORM SEWER PIPE
Storm sewers and services shall be constructed of one or more of the following materials as specified on the plans:

- Reinforced concrete pipe of the class as indicated on the plans, conforming to ASTM C-76 with trowel applied bituminous mastic compound per ASTM C-76. Where noted on the plan the joints and pipe shall incorporate flexible gaskets conforming to ASTM C-443 or ASTM C-361 in lieu of mastic (typically at water main crossings).
- Cement-lined ductile iron pipe class 52, conforming to AWWA C-151 (ANSI 21.51) with push-on joints conforming to AWWA C-111 (ANSI A21.11).
- PVC gravity sewer pipe conforming to ASTM D-3034 (for pipe diameters of 4 inch to 15 inch) or conforming to ASTM F-679 (for pipe diameters of 18 inch to 48 inch). All pipe shall be SDR 35 or stronger, with elastomeric gasket joints conforming to ASTM D-3212.

STORM SEWER BEDDING
Storm sewers shall be installed on compacted granular crushed stone bedding, 1/4 inch to 3/4 inch in size (IDOT gradation CA-6), with a minimum thickness of one fourth of the outside pipe diameter, but not less than 4 inches nor more than 8 inches. Bedding shall extend upward to the springline of the pipe for concrete and ductile iron pipe, and one foot over the top of the pipe for PVC pipe and CMP pipe. Cost for bedding shall be merged into lineal footage cost for the respective sewer pipe.

INLETS, CATCH BASINS, AND MANHOLES
All structures shall be pre-cast reinforced concrete (see construction standard details). Structure sections and adjusting rings shall be securely sealed to each other with flexible bituminous mastic. Gaps at pipe connections shall be filled and securely sealed with non-shrink hydraulic cement mortar. Frames and grates (or lids) shall be as noted on the plans and shall be securely grouted with non-shrink hydraulic cement mortar.

FLARED END SECTIONS
End sections shall be pre-cast reinforced concrete flared end sections with an end block footing in accordance with the construction standard details (or CMP metal end section as appropriate). Flared end sections for sewers 12 inches or greater shall include a safety grating per the construction standard details.

SPECIAL STRUCTURES
If called for on the plans, special structures (headwalls, boxes, etc.) shall be in accordance with the construction standard details.

VIII. MWRD GENERAL NOTES

A. REFERENCED SPECIFICATIONS
1. ALL CONSTRUCTION SHALL BE IN ACCORDANCE WITH THE APPLICABLE SECTIONS OF THE FOLLOWING, EXCEPT AS MODIFIED
HEREIN OR ON THE PLANS:
* STANDARD SPECIFICATIONS FOR ROAD AND BRIDGE CONSTRUCTION (LATEST EDITION), BY THE ILLINOIS DEPARTMENT OF TRANSPORTATION (IDOT SS) FOR ALL IMPROVEMENTS EXCEPT SANITARY SEWER AND WATER MAIN CONSTRUCTION;
* STANDARD SPECIFICATIONS FOR WATER AND SEWER MAIN CONSTRUCTION IN ILLINOIS, LATEST EDITION (SSWS) FOR SANITARY SEWER AND WATER MAIN CONSTRUCTION;
* VILLAGE OF ARLINGTON HEIGHTS MUNICIPAL CODE;
* THE METROPOLITAN WATER RECLAMATION DISTRICT OF GREATER CHICAGO (MWRD) WATERSHED MANAGEMENT ORDINANCE AND TECHNICAL GUIDANCE MANUAL;
* IN CASE OF CONFLICT BETWEEN THE APPLICABLE ORDINANCES NOTED, THE MORE STRINGENT SHALL TAKE PRECEDENCE AND SHALL CONTROL ALL CONSTRUCTION.

B. NOTIFICATIONS

1. THE MWRD LOCAL SEWER SYSTEMS SECTION FIELD OFFICE MUST BE NOTIFIED AT LEAST TWO (2) WORKING DAYS PRIOR TO THE COMMENCEMENT OF ANY WORK (CALL 708-588-4055).

2. THE VILLAGE OF ARLINGTON HEIGHTS ENGINEERING DEPARTMENT AND PUBLIC MUST BE NOTIFIED AT LEAST 24 HOURS PRIOR TO THE START OF CONSTRUCTION AND PRIOR TO EACH PHASE OF WORK. CONTRACTOR SHALL DETERMINE ITEMS REQUIRING INSPECTION PRIOR TO START OF CONSTRUCTION OR EACH WORK PHASE.

3. THE CONTRACTOR SHALL NOTIFY ALL UTILITY COMPANIES PRIOR TO BEGINNING CONSTRUCTION FOR THE EXACT LOCATIONS OF UTILITIES AND FOR THEIR PROTECTION DURING CONSTRUCTION. IF EXISTING UTILITIES ARE ENCOUNTERED THAT CONFLICT IN LOCATION WITH NEW CONSTRUCTION, IMMEDIATELY NOTIFY THE ENGINEER SO THAT THE CONFLICT CAN BE RESOLVED. CALL J.U.L.I.E. AT 1-800-892-0123.

C. GENERAL NOTES
1. ALL ELEVATIONS SHOWN ON PLANS REFERENCE THE NORTH AMERICAN VERTICAL DATUM OF 1988 (NAVD88).

2. MWRD, THE MUNICIPALITY AND THE OWNER OR OWNER'S REPRESENTATIVE SHALL HAVE THE AUTHORITY TO INSPECT, APPROVE, AND REJECT THE CONSTRUCTION IMPROVEMENTS.

3. THE CONTRACTOR(S) SHALL INDEMNIFY THE OWNER, ENGINEER, MUNICIPALITY, MWRD, AND THEIR AGENTS, ETC., FROM ALL LIABILITY INVOLVED WITH THE CONSTRUCTION, INSTALLATION, OR TESTING OF THIS WORK ON THE PROJECT.

4. THE PROPOSED IMPROVEMENTS MUST BE CONSTRUCTED IN ACCORDANCE WITH THE ENGINEERING PLANS AS APPROVED BY MWRD AND THE MUNICIPALITY UNLESS CHANGES ARE APPROVED BY MWRD, THE MUNICIPALITY, OR AUTHORIZED AGENT. THE CONSTRUCTION DETAILS, AS PRESENTED ON THE PLANS, MUST BE FOLLOWED. PROPER CONSTRUCTION TECHNIQUES MUST BE FOLLOWED ON THE IMPROVEMENTS INDICATED ON THE PLANS.

5. THE LOCATION OF VARIOUS UNDERGROUND UTILITIES WHICH ARE SHOWN ON THE PLANS ARE FOR INFORMATION ONLY AND REPRESENT THE BEST KNOWLEDGE OF THE ENGINEER. VERIFY LOCATIONS AND ELEVATIONS PRIOR TO BEGINNING THE CONSTRUCTION OPERATIONS.

6. ANY EXISTING PAVEMENT, SIDEWALK, DRIVEWAY, ETC., DAMAGED DURING CONSTRUCTION OPERATIONS AND NOT CALLED FOR TO BE REMOVED SHALL BE REPLACED AT THE EXPENSE OF THE CONTRACTOR.

7. MATERIAL AND COMPACTION TESTING SHALL BE PERFORMED IN ACCORDANCE WITH THE REQUIREMENTS OF THE MUNICIPALITY, MWRD, AND OWNER.

8. THE UNDERGROUND CONTRACTOR SHALL MAKE ALL NECESSARY ARRANGEMENTS TO NOTIFY ALL INSPECTION AGENCIES.

9. ALL NEW AND EXISTING UTILITY STRUCTURES ON SITE AND IN AREAS DISTURBED DURING CONSTRUCTION SHALL BE ADJUSTED TO FINISH GRADE PRIOR TO FINAL INSPECTION.

10. RECORD DRAWINGS SHALL BE KEPT BY THE CONTRACTOR AND SUBMITTED TO THE ENGINEER AS SOON AS UNDERGROUND IMPROVEMENTS ARE COMPLETED. FINAL PAYMENTS TO THE CONTRACTOR SHALL BE HELD UNTIL THEY ARE RECEIVED. ANY CHANGES IN LENGTH, LOCATION OR ALIGNMENT SHALL BE SHOWN IN RED. ALL WYES OR BENDS SHALL BE LOCATED FROM THE DOWNSTREAM MANHOLE. ALL VALVES, B-BOXES, TEES OR BENDS SHALL BE TIED TO A FIRE HYDRANT.

1. THE CONTRACTOR SHALL TAKE MEASURES TO PREVENT ANY POLLUTED WATER, SUCH AS GROUND AND SURFACE WATER, FROM ENTERING THE EXISTING SANITARY SEWERS.

2. A WATER-TIGHT PLUG SHALL BE INSTALLED IN THE DOWNSTREAM SEWER PIPE AT THE POINT OF SEWER CONNECTION PRIOR TO COMMENCING ANY SEWER CONSTRUCTION. THE PLUG SHALL REMAIN IN PLACE UNTIL REMOVAL IS AUTHORIZED BY THE MUNICIPALITY AND/OR MWRD AFTER THE SEWERS HAVE BEEN TESTED AND ACCEPTED.

3. DISCHARGING ANY UNPOLLUTED WATER INTO THE SANITARY SEWER SYSTEM FOR THE PURPOSE OF SEWER FLUSHING OF LINES FOR THE DEFLECTION TEST SHALL BE PROHIBITED WITHOUT PRIOR APPROVAL FROM THE MUNICIPALITY OR MWRD.

4. ALL SANITARY SEWER CONSTRUCTION SHALL BE IN ACCORDANCE WITH THE STANDARD SPECIFICATIONS FOR WATER AND SEWER MAIN CONSTRUCTION IN ILLINOIS (LATEST EDITION).

5. ALL FLOOR DRAINS SHALL DISCHARGE TO THE SANITARY SEWER SYSTEM.

6. ALL DOWNSPOUTS AND FOOTING DRAINS SHALL DISCHARGE TO THE STORM SEWER SYSTEM.

7. ALL SANITARY SEWER PIPE MATERIALS AND JOINTS (AND STORM SEWER PIPE MATERIALS AND JOINTS IN A COMBINED SEWER AREA) SHALL CONFORM TO THE FOLLOWING:

	PIPE SPECIFICATIONS	JOINT SPECIFICATIONS
VITRIFIED CLAY PIPE	ASTM C-700	ASTM C-425
REINFORCED CONCRETE SEWER PIPE	ASTM C-76	ASTM C-443
CAST IRON SOIL PIPE	ASTM A-74	ASTM C-564
DUCTILE IRON PIPE	ANSI A21.51	ANSI A21.11
POLYVINYL CHLORIDE (PVC) PIPE		
6-INCH TO 15-INCH DIAMETER SDR 26	ASTM D-3034	ASTM D-3212
18-INCH TO 27-INCH DIAMETER F/DY=46	ASTM F-679	ASTM D-3212
HIGH DENSITY POLYETHYLENE (HDPE)	ASTM D-3350 ASTM D-3035	ASTM D-3261,F-2620 (HEAT FUSION) ASTM D-3212,F-477 (GASKETED)
WATER MAIN QUALITY PVC		
4-INCH TO 36-INCH	ASTM D-2241	
4-INCH TO 12-INCH	AWWA C900	ASTM D-2672 OR ASTM D-3139
14-INCH TO 48-INCH	AWWA C905	ASTM D-3212
		ASTM D-3212

THE FOLLOWING MATERIALS ARE ALLOWED ON A QUALIFIED BASIS SUBJECT TO DISTRICT REVIEW AND APPROVAL PRIOR TO PERMIT ISSUANCE. A SPECIAL CONDITION WILL BE ADDED TO THE PERMIT WHEN THE PIPE MATERIAL BELOW IS USED FOR SEWER CONSTRUCTION OR A CONNECTION IS MADE.

	PIPE SPECIFICATIONS	JOINT SPECIFICATIONS
POLYPROPYLENE (PP) PIPE		
12-INCH TO 24-INCH DOUBLE WALL	ASTM F-2736	D-3212, F-477
30-INCH TO 60-INCH TRIPLE WALL	ASTM F-2764	D3212, F-477

8. ALL SANITARY SEWER CONSTRUCTION (AND STORM SEWER CONSTRUCTION IN COMBINED SEWER AREAS), REQUIRES STONE BEDDING WITH STONE ¼ " TO 1" IN SIZE, WITH MINIMUM BEDDING THICKNESS EQUAL TO ¼ THE OUTSIDE DIAMETER OF THE SEWER PIPE, BUT NOT LESS THAN FOUR (4) INCHES NOR MORE THAN EIGHT (8) INCHES. MATERIAL SHALL BE CA-7, CA-11 OR CA-13 AND SHALL BE EXTENDED AT LEAST 12" ABOVE THE TOP OF THE PIPE WHEN USING PVC.

9. "BAND SEAL" OR SIMILAR NON-SHEAR FLEXIBLE-TYPE COUPLINGS SHALL BE USED IN THE CONNECTION OF SEWER PIPES OF DISSIMILAR MATERIALS.

10. ALL MANHOLES SHALL BE PROVIDED WITH BOLTED, WATERTIGHT COVERS. SANITARY LIDS SHALL BE CONSTRUCTED WITH A CONCEALED PICKHOLE AND WATERTIGHT GASKET WITH THE WORD "SANITARY" CAST INTO THE LID.

11. WHEN CONNECTING TO AN EXISTING SEWER MAIN BY MEANS OTHER THAN AN EXISTING WYE, TEE, OR AN EXISTING MANHOLE, ONE OF THE FOLLOWING METHODS SHALL BE USED:
a) A CIRCULAR SAW-CUT OF SEWER MAIN BY PROPER TOOLS ("SHEWER-TAP" MACHINE OR SIMILAR) AND PROPER INSTALLATION OF HUBWYE SADDLE OR HUB-TEE SADDLE.
b) REMOVE AN ENTIRE SECTION OF PIPE (BREAKING ONLY THE TOP OF ONE BELL) AND REPLACE WITH A WYE OR TEE BRANCH SECTION.
c) WITH PIPE CUTTER, NEATLY AND ACCURATELY CUT OUT DESIRED LENGTH OF PIPE FOR INSERTION OF PROPER FITTING, USING "BAND SEAL" OR SIMILAR COUPLINGS TO HOLD IT FIRMLY IN PLACE.

12. WHENEVER A SANITARY/COMBINED SEWER CROSSES UNDER A WATERMAIN, THE MINIMUM VERTICAL DISTANCE FROM THE TOP OF THE SEWER TO THE BOTTOM OF THE WATERMAIN SHALL BE 18 INCHES. FURTHERMORE, A MINIMUM HORIZONTAL DISTANCE OF 10 FEET BETWEEN SANITARY/COMBINED SEWERS AND WATERMAINS SHALL BE MAINTAINED UNLESS: THE SEWER IS LAID IN SEPARATE TRENCH, KEEPING A MINIMUM 18" VERTICAL SEPARATION; OR THE SEWER IS LAID IN THE SAME TRENCH WITH THE WATERMAIN LOCATED AT THE OPPOSITE SIDE ON A BENCH OF UNDISTURBED EARTH, KEEPING A MINIMUM 18" VERTICAL SEPARATION. IF EITHER THE VERTICAL OR HORIZONTAL DISTANCES DESCRIBED ABOVE CANNOT BE MAINTAINED, OR THE SEWER CROSSES ABOVE THE WATERMAIN, THE SEWER SHALL BE CONSTRUCTED TO WATERMAIN STANDARDS.

13. ALL EXISTING SEPTIC SYSTEMS SHALL BE ABANDONED. ABANDONED TANKS SHALL BE FILLED WITH GRANULAR MATERIAL OR REMOVED.

14. ALL SANITARY MANHOLES, (AND STORM MANHOLES IN COMBINED SEWER AREAS), SHALL HAVE A MINIMUM INSIDE DIAMETER OF 48 INCHES, AND SHALL BE CAST IN PLACE OR PRE-CAST REINFORCED CONCRETE.

15. ALL SANITARY MANHOLES, (AND STORM MANHOLES IN COMBINED SEWER AREAS), SHALL HAVE PRECAST "RUBBER BOOTS" THAT CONFORM TO ASTM C-923 FOR ALL PIPE CONNECTIONS. PRECAST SECTIONS SHALL CONSIST OF MODIFIED GROOVE TONGUE AND RUBBER GASKET TYPE JOINTS.

16. ALL ABANDONED SANITARY SEWERS SHALL BE PLUGGED AT BOTH ENDS WITH AT LEAST 2 FEET LONG NON-SHRINK CONCRETE OR MORTAR PLUG.

17. EXCEPT FOR FOUNDATION/FOOTING DRAINS PROVIDED TO PROTECT BUILDINGS, OR PERFORATED PIPES ASSOCIATED WITH VOLUME CONTROL FACILITIES, DRAIN TILES/FIELD TILES/UNDERDRAINS/PERFORATED PIPES ARE NOT ALLOWED TO BE CONNECTED TO OR TRIBUTARY TO COMBINED SEWERS, SANITARY SEWERS, OR STORM SEWERS TRIBUTARY TO COMBINED SEWERS IN COMBINED SEWER AREAS. CONSTRUCTION OF NEW FACILITIES OF THIS TYPE IS PROHIBITED; AND ALL EXISTING DRAIN TILES AND PERFORATED PIPES ENCOUNTERED WITHIN THE PROJECT AREA SHALL BE PLUGGED OR REMOVED, AND SHALL NOT BE CONNECTED TO COMBINED SEWERS, SANITARY SEWERS, OR STORM SEWERS TRIBUTARY TO COMBINED SEWERS.

18. A BACKFLOW PREVENTER IS REQUIRED FOR ALL DETENTION BASINS TRIBUTARY TO COMBINED SEWERS. REQUIRED BACKFLOW PREVENTERS SHALL BE INSPECTED AND EXERCISED ANNUALLY BY THE PROPERTY OWNER TO ENSURE PROPER OPERATION, AND ANY NECESSARY MAINTENANCES SHALL BE PERFORMED TO ENSURE FUNCTIONALITY. IN THE EVENT OF A SEWER SURCHARGE INTO AN OPEN DETENTION BASIN TRIBUTARY TO COMBINED SEWERS, THE PERMITTEE SHALL ENSURE THAT CLEAN UP AND WASH OUT OF SEWAGE TAKES PLACE WITHIN 48 HOURS OF THE STORM EVENT.

E. EROSION AND SEDIMENT CONTROL

1. THE CONTRACTOR SHALL INSTALL THE EROSION AND SEDIMENT CONTROL DEVICES AS SHOWN ON THE APPROVED EROSION AND SEDIMENT CONTROL PLAN.

2. EROSION AND SEDIMENT CONTROL PRACTICES SHALL BE FUNCTIONAL PRIOR TO HYDROLOGIC DISTURBANCE OF THE SITE.

3. ALL DESIGN CRITERIA, SPECIFICATIONS, AND INSTALLATION OF EROSION AND SEDIMENT CONTROL PRACTICES SHALL BE IN ACCORDANCE WITH THE ILLINOIS URBAN MANUAL.

4. A COPY OF THE APPROVED EROSION AND SEDIMENT CONTROL PLAN SHALL BE MAINTAINED ON THE SITE AT ALL TIMES.

5. INSPECTIONS AND DOCUMENTATION SHALL BE PERFORMED, AT A MINIMUM:
a) UPON COMPLETION OF INITIAL EROSION AND SEDIMENT CONTROL MEASURES, PRIOR TO ANY SOIL DISTURBANCE.
b) ONCE EVERY SEVEN (7) CALENDAR DAYS AND WITHIN 24 HOURS OF THE END OF A STORM EVENT WITH GREATER THAN 0.5 INCH OF RAINFALL OR LIQUID EQUIVALENT PRECIPITATION.

6. SOIL DISTURBANCE SHALL BE CONDUCTED IN SUCH A MANNER AS TO MINIMIZE EROSION. IF STRIPPING, CLEARING, GRADING, OR LANDSCAPING ARE TO BE DONE IN PHASES, THE CO-PERMITTEE SHALL PLAN FOR APPROPRIATE SOIL EROSION AND SEDIMENT CONTROL MEASURES.

7. A STABILIZED MAT OF CRUSHED STONE MEETING THE STANDARDS OF THE ILLINOIS URBAN MANUAL SHALL BE INSTALLED AT ANY POINT WHERE TRAFFIC WILL BE ENTERING OR LEAVING A CONSTRUCTION SITE. SEDIMENT OR SOIL REACHING AN IMPROVED PUBLIC RIGHT-OF-WAY, STREET, ALLEY OR PARKING AREA SHALL BE REMOVED BY SCRAPING OR STREET CLEANING AS ACCUMULATIONS WARRANT AND TRANSPORTED TO A CONTROLLED SEDIMENT DISPOSAL AREA.

8. CONCRETE WASHOUT FACILITIES SHALL BE CONSTRUCTED IN ACCORDANCE WITH THE ILLINOIS URBAN MANUAL AND SHALL BE INSTALLED PRIOR TO ANY ON SITE CONSTRUCTION ACTIVITIES INVOLVING CONCRETE.

9. TEMPORARY DIVERSIONS SHALL BE CONSTRUCTED AS NECESSARY TO DIRECT ALL RUNOFF FROM HYDROLOGICALLY DISTURBED AREAS TO AN APPROPRIATE SEDIMENT TRAP OR BASIN. VOLUME CONTROL FACILITIES SHALL NOT BE USED AS TEMPORARY SEDIMENT BASINS.

10. DISTURBED AREAS OF THE SITE WHERE CONSTRUCTION ACTIVITIES HAVE TEMPORARILY OR PERMANENTLY CEASED SHALL BE STABILIZED WITH TEMPORARY OR PERMANENT MEASURES WITHIN SEVEN (7) DAYS.

11. ALL FLOOD PROTECTION AREAS AND VOLUME CONTROL FACILITIES SHALL, AT A MINIMUM, BE PROTECTED WITH A DOUBLE-ROW OF SILT FENCE (OR EQUIVALENT).

12. VOLUME CONTROL FACILITIES SHALL NOT BE CONSTRUCTED UNTIL ALL OF THE CONTRIBUTING DRAINAGE AREA HAS BEEN STABILIZED.

13. SOIL STOCKPILES SHALL, AT A MINIMUM, BE PROTECTED WITH PERIMETER SEDIMENT CONTROLS. SOIL STOCKPILES SHALL NOT BE PLACED IN FLOOD PROTECTION AREAS OR THEIR BUFFERS.

14. EARTHEN EMBANKMENT SIDE SLOPES SHALL BE STABILIZED WITH APPROPRIATE EROSION CONTROL BLANKET.

15. STORM SEWERS THAT ARE OR WILL BE FUNCTIONING DURING CONSTRUCTION SHALL BE PROTECTED BY APPROPRIATE SEDIMENT CONTROL MEASURES.

16. THE CONTRACTOR SHALL EITHER REMOVE OR REPLACE ANY EXISTING DRAIN TILES AND INCORPORATE THEM INTO THE DRAINAGE PLAN FOR THE DEVELOPMENT. DRAIN TILES CANNOT BE TRIBUTARY TO A SANITARY OR COMBINED SEWER.

17. IF DEWATERING SERVICES ARE USED, ADJOINING PROPERTIES AND DISCHARGE LOCATIONS SHALL BE PROTECTED FROM EROSION AND SEDIMENTATION. DEWATERING SYSTEMS SHOULD BE INSPECTED DAILY DURING OPERATIONAL PERIODS. THE SITE INSPECTOR MUST BE PRESENT AT THE COMMENCEMENT OF DEWATERING ACTIVITIES.

18. THE CONTRCTOR SHALL BE RESPONSIBLE FOR TRENCH DEWATERING AND EXCAVATION FOR THE INSTALLATION OF SANITARY SEWERS, STORM SEWERS, WATERMAINS AS WELL AS THEIR SERVICES AND OTHER APPURTENANCES. ANY TRENCH DEWATERING, WHICH CONTAINS SEDIMENT SHALL PASS THROUGH A SEDIMENT SETTLING POND OR EQUALLY EFFECTIVE SEDIMENT CONTROL DEVICE. ALTERNATIVES MAY INCLUDE DEWATERING INTO A SUMP PIT, FILTER BAG OR EXISTING VEGETATED UPSLOPE AREA. SEDIMENT LADEN WATERS SHALL NOT BE DISCHARGE TO WATERWAYS, FLOOD PROTECTION AREAS OR THE COMBINED SEWER SYSTEM.

19. ALL PERMANENT EROSION CONTROL PRACTICES SHALL BE INITIATED WITHIN SEVEN (7) DAYS FOLLOWING THE COMPLETION OFSOIL DISTURBING ACTIVITIES.

20. ALL EROSION AND SEDIMENT CONTROL MEASURES SHALL BE MAINTAINED AND REPAIRED AS NEEDED ON A YEAR-ROUND BASIS DURING CONSTRUCTION AND ANY PERIODS OF CONSTRUCTION SHUTDOWN UNTIL PERMANENT STABILIZATION IS ACHIEVED.

21. ALL TEMPORARY EROSION AND SEDIMENT CONTROL MEASURES SHALL BE REMOVED WITHIN THIRTY (30) DAYS AFTER PERMANENT SITE STABILIZATION.

22. THE EROSION AND SEDIMENT CONTROL MEASURES SHOWN ON THE PLANS ARE THE MINIMUM REQUIREMENTS. ADDITIONAL MEASURES MAY BE REQUIRED, AS DIRECTED BY THE ENGINEER, SITE INSPECTOR, OR MWRD.

VII. PAVEMENT, CURBS, AND SIDEWALKS

GENERAL STANDARDS
Unless specifically modified below, all pavement, curb, and sidewalk construction shall be done in accordance with the applicable sections of the "Standard Specifications for Road and Bridge Construction in Illinois," as published by IDOT, latest edition.

SUBGRADE PREPARATON
The subgrade for roadways, pavement, and/or curbs and walks shall be finished by the excavation contractor to within 0.1 foot, plus or minus, of plan elevation. The paving contractor shall confirm the proper preparation of the rough subgrade, or notify the owner and engineer in writing of any discrepancies. Prior to placement of base material, the paving contractor shall fine grade the subgrade to insure proper thicknesses for all base and pavement courses.

BITUMINOUS PAVEMENT
Bituminous Pavement shall consist of the sub-base course, base course, hot-mix asphalt binder course, and hot-mix asphalt surface course, of the thickness and materials as specified on the plans. The maximum size aggregate for the hot-mix surface course mixture shall be 3/8 inches. A prime coat shall be applied to the sub-base course (or base course) as indicated on the plans. A tack coat shall be applied to the binder course prior to surface course placement.

WEATHER REQUIREMENTS FOR BITUMINOUS PAVING
Hot-mix binder shall be placed only when the ambient air temperature is at least 40 degrees Fahrenheit and the forecast is for rising temperatures. Hot-mix surface shall be placed when the ambient air temperature is at least 45 degrees Fahrenheit and the forecast is for rising temperatures.

BITUMINOUS PAVEMENT INSTALLATION
After installation of the base course, all traffic shall be kept off the base until the binder course is placed. After installation of the binder course and upon completion of inspection and approval by the applicable governmental agency and owner, the binder shall be cleaned, a tack coat shall be applied at a rate of 0.05 gal/square yard (cost incidental), and the surface course shall be placed. All damaged areas in the binder, base or curb shall be repaired prior to surface replacement.

CHECKMATE ULTRAFLEX SLIP-IN INLINE CHECK VALVES
Specification TT-CMUF-SL

PART 1: GENERAL

1.01 SUBMITTALS

A. Submit product literature that includes information on the performance and operation of the valve, materials of construction, dimensions and weights, elastomer characteristics, headloss, flow data and pressure ratings.

B. Upon request, provide shop drawings that clearly identify the valve materials of construction and dimensions.

1.02 QUALITY ASSURANCE

A. Supplier shall have at least twelve (12) years experience in the design and manufacture of "CheckMate™" style elastomeric check valves.

B. Manufacturer shall have designed, fabricated and have at least five (5) current installation of a "CheckMate" style elastomeric check valves in the 72" (1800mm) size. Manufacturer must provide documentation, including project name, location, and references.

C. Manufacturer shall have conducted independent hydraulic testing to determine headloss, jet velocity and vertical opening height characteristics on a minimum of three (3) sizes of CheckMate Valves ranging from 6" (150mm) through 24" (600mm). The testing must have been conducted for free discharge (pressurized and open channel flow discharging to atmosphere) and submerged conditions.

PART 2: PRODUCTS

2.01 CHECKMATE ULTRAFLEX ELASTOMERIC CHECK VALVES

A. Check Valves are to be all rubber and the flow operated check type with slip-in cuff connection. The entire CheckMate Ultraflex Valve shall be ply reinforced throughout the body, saddle and bill, which is cured and vulcanized into a one-piece unibody construction. A separate valve body or pipe used as the housing is not acceptable. The valve shall be manufactured with no metal, mechanical hinges or fasteners, which would be used to secure any component of the valve to a valve housing. The port area of the saddle shall contour into a circumferential sealing area (the "bill") that is concentric with the pipe which shall allow passage of flow in one direction while preventing reverse flow. The entire valve shall fit within the pipe inside diameter. The saddle area of the valve must be flat, not conical, and integral with the rubber body above centerline in order to not produce any areas or voids that can collect or trap debris. The valve must be easily installed in pipes with poor end condition without the need to modify or utilize the headwall or structure to seal and anchor the valve. Once installed, the CheckMate Ultraflex Valve shall not protrude beyond the face of the structure or end of the pipe.

B. The CheckMate Ultraflex Valve shall incorporate multiple concave grooves molded integrally into the flat saddle wall thickness extending longitudinally a minimum of 80% of the length of the saddle to reduce opening resistance and reduce headloss.

C. The CheckMate Ultraflex Valve shall incorporate a custom shaped notch in the end of the bill to reduce cracking pressure. The notch shall be at the invert/bottom of the bill and symmetrical about the valve centerline. The longitudinal length of the notch shall be no greater than half the length of the bill.

D. The outside diameter of the upstream and downstream sections of the valve must be circumferentially in contact with the inside diameter of the pipe.

E. Slip-in style CheckMate Ultraflex Valves will be furnished with a set of stainless steel expansion clamps. The clamps, which will secure the valve in place, shall be installed in the upstream or downstream cuff of the valve, depending on installation orientation, and shall expand outwards by means of a turnbuckle. Each band shall be pre-drilled allowing for the valve to be pinned and secured into position in accordance with the manufacturer's installation instructions.

F. Manufacturer must have flow test data from an accredited hydraulics laboratory to confirm pressure drop and hydraulic data.

E. Company name, plant location, valve size patent number, and serial number shall be bonded to the check valve.

2.02 FUNCTION

A. When line pressure exceeds the backpressure, the line pressure forces the bill and saddle of the valve open, allowing flow to pass. When the backpressure exceeds the line pressure, or in the absence of any upstream or downstream pressure, the bill and saddle of the valve is forced closed, preventing backflow.

2.03 MANUFACTURER

A. All valves shall be Series CMUF-SL slip-in CheckMate Ultraflex Valves as manufactured by Tideflex Technologies®, A Division of Red Valve Company, Carnegie, PA 15106. All valves shall be manufactured in the U.S.A.

PART 3: EXECUTION

3.01 INSTALLATION

A. Valve shall be installed in accordance with manufacturer's written Installation and Operation Manual and approved submittals.

3.02 MANUFACTURER'S CUSTOMER SERVICE

A. Manufacturer's authorized representative shall be available for customer service during installation and start-up, and to train personnel in the operation, maintenance and troubleshooting of the valve.

B. If specified, the manufacturer shall also make customer service available directly from the factory in addition to authorized representatives for assistance during installation and start-up, and to train personnel in the operation, maintenance and

	DATE	REVISIONS	DRAWN BY
1.	08/16/17	VILLAGE REVISIONS	ZRN
2.	09/06/17	VILLAGE REVISIONS	TLM
3.	12/15/17	VILLAGE/CLIENT REVISIONS	TLM
4.	01/26/18	VILLAGE REVISIONS	TLM
5.	02/13/18	CLIENT REVISIONS	AVS

© COPYRIGHT 2017

SIGWALT STREET APARTMENTS
ARLINGTON HEIGHTS, ILLINOIS
PROJECT NOTES AND SPECIFICATIONS

RWG Engineering, LLC
Civil Engineering ◆ Real Estate Consulting ◆ Project Management
975 E. 22nd St, Suite 400
Wheaton, IL 60189
630.480.7889
www.rwg-engineering.com

PROJECT NO. 29112716
DATE 07/10/17
SCALE NONE
PROJ. MGR. RWG
PROJ. ASSOC. MRM
DRAWN BY ZRN

February 13, 2018 2:23:46 p.m. AcadVer: 22.0s (LMS Tech)
Drawing: S:\29112716 - ARLINGTON HTS APARTMENTS\300_ENGINEERING\310_CADD\FINAL\291_BASE.DWG

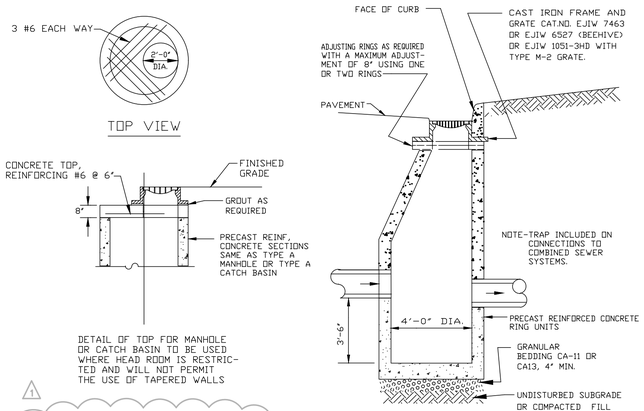

RESTRICTED DEPTH MANHOLE / CATCH BASIN — TYPE A - CATCH BASIN

* RUBBER BOOT CONFORMING TO ASTM C-923 AT ALL STORM SEWERS & SANITARY SEWER PIPE/STRUCTURE CONNECTIONS
** CHIMNEY SEALS TO BE PLACED ON ALL STORM AND SANITARY STRUCTURES

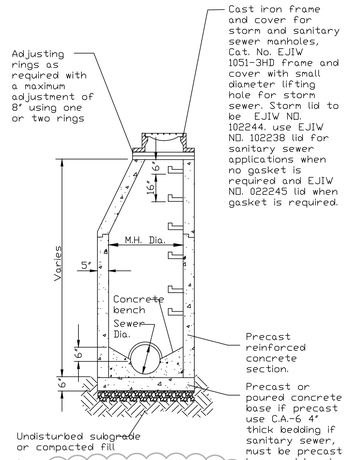

Notes:
1. All public manhole lids shall have the words "Arlington Heights" type cast into them, as well as the designation "Sanitary" or "Storm".
2. When manhole is located at sewer intersections, or bends, the bench shall be shaped to provide smooth unobstructed flow conditions
3. Manhole steps made of copolymer propylene plastic per as manufactured by M.A. Industries, Inc., Cat. No. PSI-PF or approved equal.
4. All pipes entering or exiting sanitary manholes shall have a waterproof flexible gasket seal conforming to A.S.T.M. specification No. C-923-79.
5. For complete manhole specifications see article 3.08 of the Manual of Practice of the Village of Arlington Heights

TYPE A - MANHOLE

* RUBBER BOOT CONFORMING TO ASTM C-923 AT ALL STORM & SANITARY SEWER PIPE/STRUCTURE CONNECTIONS
** CHIMNEY SEALS TO BE PLACED ON ALL STORM AND SANITARY STRUCTURES

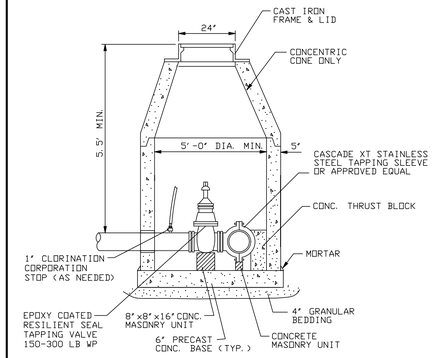

VALVE VAULT, TYPE A W/ PRESSURE CONNECTION

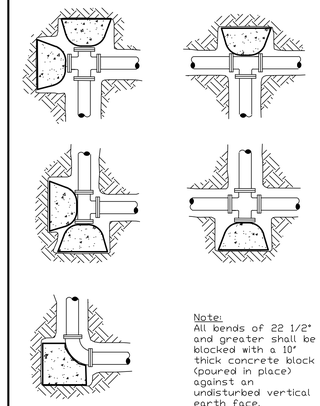

Note:
All bends of 22 1/2° and greater shall be blocked with a 10" thick concrete block (poured in place) against an undisturbed vertical earth face.

THRUST BLOCK INSTALLATIONS

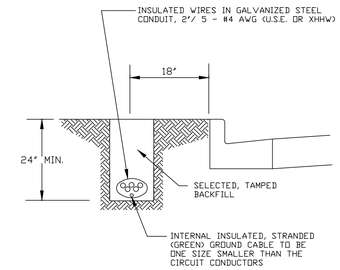

CABLE TRENCHING

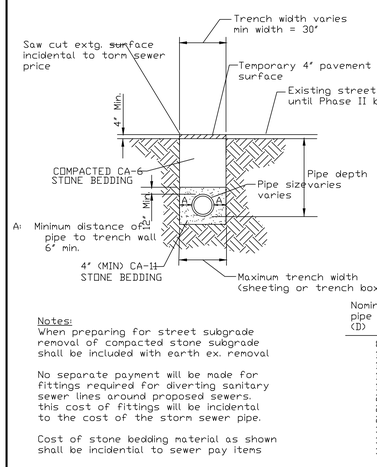

Notes:
When preparing for street subgrade removal of compacted stone subgrade shall be included with earth ex. removal

No separate payment will be made for fittings required for diverting sanitary sewer lines around proposed sewers. this cost of fittings will be incidental to the cost of the storm sewer pipe.

Cost of stone bedding material as shown shall be incidental to sewer pay items

Nominal pipe dia (D)	Maximum trench width at pipe crown
8"	3'-2"
10"	3'-2"
12"	3'-2"
15"	3'-6"
18"	3'-10"
21"	4'-4"
24"	4'-8"
27"	4'-11"
30"	5'-3"
33"	6'-0"
36"	6'-4"

SANITARY SEWER TRENCH DETAIL

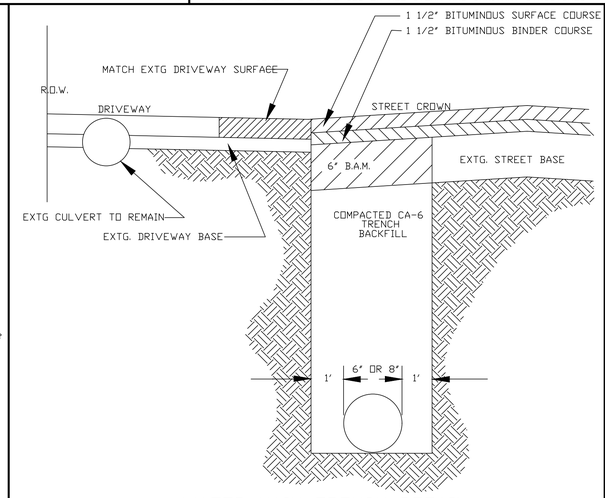

WATER MAIN TRENCH DETAIL
PAVEMENT SECTION (NOT INCLUDING A.H. ROAD)

Fire hydrants shall meet AWWA C-502 and be Traverse City Iron Works, East Jordan 5 br, or approved equal with one 5 1/4" valve opening, two 2 1/2" hose nozzles and one 5" pumper nozzle. Threads shall conform with national standard specifications. Each hydrant shall be equipped with an auxiliary resilient seal gate valve complete with roadway box, Tyler 6850 series, item 658-5. Fire hydrants must have thier discharge at least 18" but not more than 24" from the surface of the adjacent ground. hydrants shall be installed no closer than 3 feet and no more than 8 feet from the back of curb or edge of pavement to the 5" steamer nut. No barriers, trees, bushes, walls or other obstacles which may hide or impede the use of a fire hydrant shall be installed, maintained, constructed, or enlarged, within 48" of a fire hydrant. Hydrants which will be maintained by the Village shall be painted red, and privately maintained hydrants shall be painted yellow. all nozzle caps will be painted a reflective gray or white by the Public Works Dept. after notification from the developer. Contact the Superintendent of Utilities for additional details at 577-5600

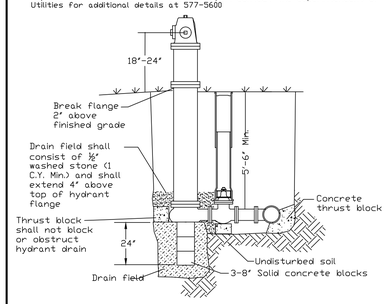

FIRE HYDRANT

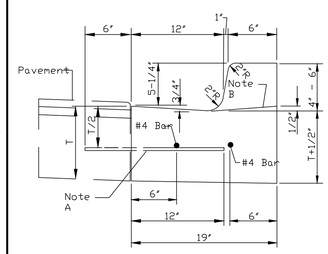

BARRIER TYPE CURB

Notes:
1. 2-#4 longitudinal bars 20 feet in length with 12" overlaps, at 60' intervals, except at expansion joints.
2. Expansion joints shall be a minimum of 3/4" preformed expansion material and shall be provided with a 1" dia. x 18" coated smooth dowel bar fitted with a cap that will allow a minimum of 1" of expansion.
3. Construction joints shall be template formed or saw-cut (within 24 hours of placement of the curb) to 1/5th the depth of the gutter flag at 20ft. intervals or at the joints depth of the gutter flag at 20ft. intervals or at the joints in an adjacent concrete pavement.

Note "A"
1/2" dia. steel tie bars @ 2'-6" centers grouted in place or 5/8" dia. j-bolts anchored in place. (omit for bituminous base course)

Note "B"
Profile for depressed curb @ driveways and ramps

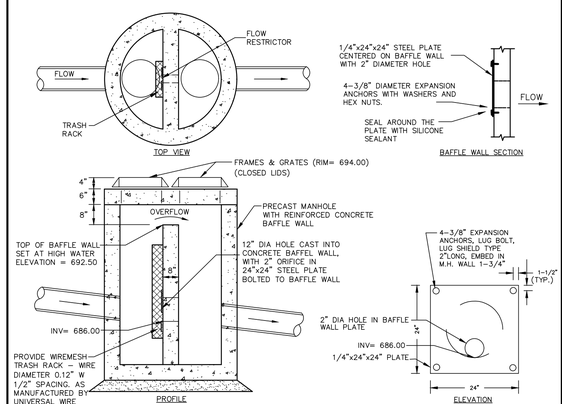

RESTRICTOR IN CATCH BASIN No. 27

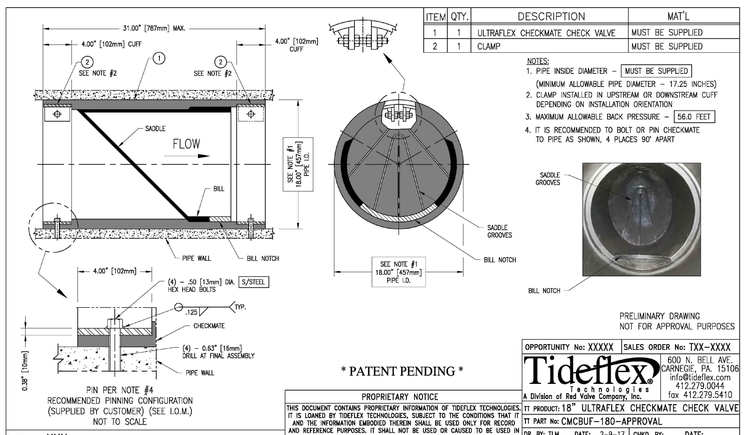

ITEM	QTY.	DESCRIPTION	MAT'L
1	1	ULTRAFLEX CHECKMATE CHECK VALVE	MUST BE SUPPLIED
2	1	CLAMP	MUST BE SUPPLIED

NOTES:
1. PIPE INSIDE DIAMETER - MUST BE SUPPLIED (MINIMUM ALLOWABLE PIPE DIAMETER - 17.25 INCHES)
2. CLAMP INSTALLED IN UPSTREAM OR DOWNSTREAM CUFF DEPENDING ON INSTALLATION ORIENTATION
3. MAXIMUM ALLOWABLE BACK PRESSURE - 56.0 FEET
4. IT IS RECOMMENDED TO BOLT OR PIN CHECKMATE TO PIPE AS SHOWN, 4 PLACES 90° APART

PRELIMINARY DRAWING NOT FOR APPROVAL PURPOSES

PIN PER NOTE #4
RECOMMENDED PINNING CONFIGURATION (SUPPLIED BY CUSTOMER) (SEE I.O.M.)
NOT TO SCALE

CUSTOMER: XXX
ORDER No: XXX

* PATENT PENDING *

OPPORTUNITY No: XXXXX | SALES ORDER No: TXX-XXXX

Tideflex Technologies
A Division of Red Valve Company, Inc.
600 N. BELL AVE.
CARNEGIE, PA. 15106
info@tideflex.com
412.279.0044
fax 412.279.5410

TT PRODUCT: 18" ULTRAFLEX CHECKMATE CHECK VALVE
TT PART No: CMCBUF-180-APPROVAL
DR. BY: TLM | DATE: 2-9-17 | CHKD. BY: | DATE:
CAD SCALE: FULL | REV
PLOT SCALE: 1 = 1 | DWG No: TTS-XXXX

PROPRIETARY NOTICE
THIS DOCUMENT CONTAINS PROPRIETARY INFORMATION OF TIDEFLEX TECHNOLOGIES. IT IS LOANED BY TIDEFLEX TECHNOLOGIES, SUBJECT TO THE CONDITIONS THAT IT AND THE INFORMATION EMBODIED THEREIN SHALL BE USED ONLY FOR RECORD AND REFERENCE PURPOSES. IT SHALL NOT BE USED OR CAUSED TO BE USED IN ANY WAY PREJUDICIAL TO THE INTERESTS OF TIDEFLEX TECHNOLOGIES. IT SHALL NOT BE REPRODUCED OR COPIED IN WHOLE OR PART, OR DISCLOSED TO ANYONE WITHOUT THE DIRECT WRITTEN PERMISSION OF TIDEFLEX TECHNOLOGIES AND SHALL BE RETURNED UPON REQUEST.

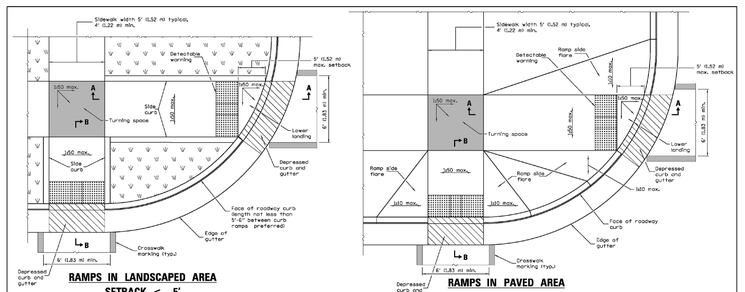

RAMPS IN LANDSCAPED AREA
SETBACK ≤ 5'

RAMPS IN PAVED AREA
SETBACK ≤ 5'

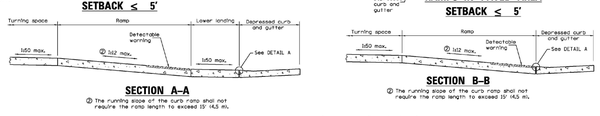

SECTION A-A
② The running slope of the curb ramp shall not require the ramp length to exceed 15' (4.5 m).

SECTION B-B
② The running slope of the curb ramp shall not require the ramp length to exceed 15' (4.5 m).

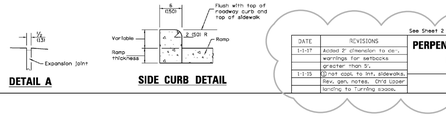

DETAIL A
SIDE CURB DETAIL

See Sheet 2 for GENERAL NOTES.

DATE	REVISIONS
1-11-17	Added 2" dimension to side warnings for setbacks greater than 5'.
1-1-15	Original rev. to int. sidewalks. Rev. gen. notes. Omit lower landing for turning space.

PERPENDICULAR CURB RAMPS FOR SIDEWALKS
(Sheet 1 of 2)
STANDARD 424001-09

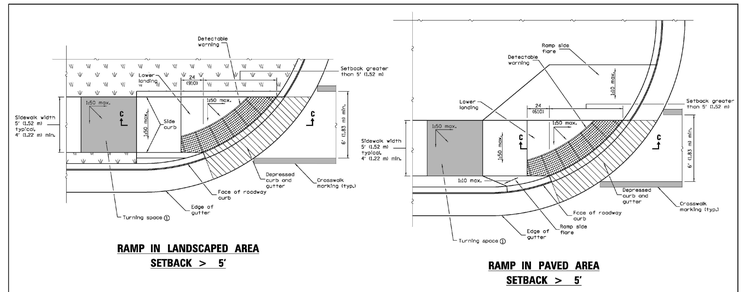

RAMP IN LANDSCAPED AREA
SETBACK > 5'

RAMP IN PAVED AREA
SETBACK > 5'

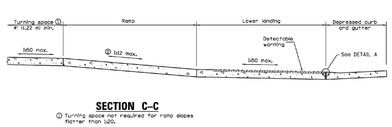

SECTION C-C
① Turning space not required for ramp slopes flatter than 1:20.
② The running slope of the curb ramp shall not require the ramp length to exceed 15' (4.5 m).

GENERAL NOTES
All slope ratios are expressed as units of vertical displacement to units of horizontal displacement (rise).

Where the turning space is constrained on a side opposite a ramp, the minimum length of the turning space in the direction of the ramp-run shall be 5' (1.52 m).

Where 1:20 maximum slope is shown, 1:64 is preferred.

See Standard 606001 for details of depressed curb adjacent to curb ramp.

All dimensions are in inches unless otherwise unless otherwise shown.

PERPENDICULAR CURB RAMPS FOR SIDEWALKS
(Sheet 2 of 2)
STANDARD 424001-09

February 13, 2018 2:23:57 pm\ AcadVer:23.0s (LMS Tech)
Drawing: S:\29112716 - ARLINGTON HTS APARTMENTS\300_ENGINEERING\310_CADD\FINAL\291_BASE.DWG

DATE	REVISIONS	DRAWN BY
1. 08/16/17	VILLAGE REVISIONS	ZRN
2. 09/06/17	VILLAGE REVISIONS	TLM
3. 12/15/17	VILLAGE/CLIENT REVISIONS	TLM
4. 01/26/18	VILLAGE REVISIONS	TLM
5. 02/13/18	CLIENT REVISIONS	AVS

SIGWALT STREET APARTMENTS
ARLINGTON HEIGHTS, ILLINOIS
CONSTRUCTION DETAILS AND STANDARDS

© COPYRIGHT 2017

RWG Engineering, LLC
Civil Engineering ♦ Real Estate Consulting ♦ Project Management
975 E. 22nd St. Suite 400
Wheaton, IL 60189
630.480.7889
www.rwg-engineering.com

PROJECT NO. 29112716
DATE 07/10/17
SCALE NONE
PROJ. MGR. RWG
PROJ. ASSOC. MRM
DRAWN BY ZRN

StormTrap®
MODULAR CONCRETE STORMWATER MANAGEMENT

SHEET INDEX

PAGE	DESCRIPTION
0.0	COVER SHEET
1.0	DOUBLETRAP DESIGN CRITERIA
2.0	DOUBLETRAP SYSTEM LAYOUT
3.0	DOUBLETRAP INSTALLATION SPECIFICATIONS
3.1	DOUBLETRAP INSTALLATION SPECIFICATIONS
4.0	DOUBLETRAP BACKFILL SPECIFICATIONS
5.0	RECOMMENDED PIPE / ACCESS OPENING SPECIFICATIONS
6.0	DOUBLETRAP MODULE TYPES

STORMTRAP CONTACT INFORMATION

STORM TRAP SUPPLIER: STORMTRAP
CONTACT NAME: ANTHONY CAUDLE
CELL PHONE: 815-545-6131
SALES EMAIL: ACAUDLE@STORMTRAP.COM

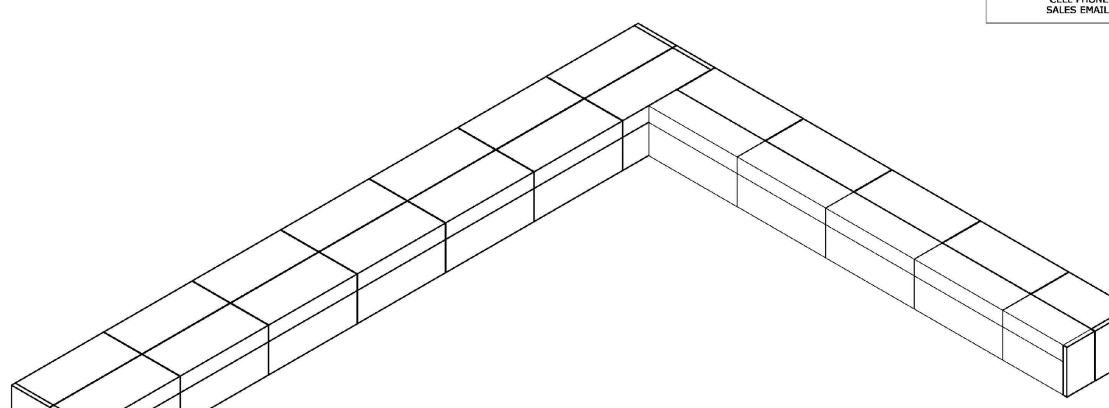

SIGWALT APARTMENTS
ARLINGTON HEIGHTS, IL

StormTrap®
PATENTS LISTED AT: [HTTP://STORMTRAP.COM/PATENT]
1287 WINDHAM PARKWAY
ROMEOVILLE, IL 60446
P:815-941-4549 / F:331-318-5347

ENGINEER INFORMATION:
RWG ENGINEERING
975 E. 22ND STREET
SUITE 400
WHEATON, IL 60189
PHONE: 630-480-7889

PROJECT INFORMATION:
SIGWALT APARTMENTS
ARLINGTON HEIGHTS, IL

CURRENT ISSUE DATE: 12/15/2017

ISSUED FOR: PRELIMINARY

REV.	DATE:	ISSUED FOR:	DWN BY:
2	12/15/2017	PRELIMINARY	DS
1	7/5/2017	PRELIMINARY	DS

SCALE: NTS

SHEET TITLE: COVER SHEET

SHEET NUMBER: 0.0

STRUCTURAL DESIGN LOADING CRITERIA

LIVE LOADING:	AASHTO HS-20 HIGHWAY LOADING
GROUND WATER TABLE:	BELOW INVERT OF SYSTEM
SOIL BEARING PRESSURE:	3000 PSF
SOIL DENSITY:	120 PCF
EQUIVALENT UNSATURATED LATERAL ACTIVE EARTH PRESSURE:	35 PSF / FT.
EQUIVALENT SATURATED LATERAL ACTIVE EARTH PRESSURE:	80 PSF/FT. (IF WATER TABLE PRESENT)
APPLICABLE CODES:	AASHTO ACI-318
BACKFILL TYPE:	¾" STONE AGGREGATE

STORMTRAP SYSTEM INFORMATION

WATER STORAGE REQ'D:	12,633.00 CUBIC FEET
WATER STORAGE PROV:	12,765.97 CUBIC FEET
UNIT HEADROOM:	6'-6" DOUBLETRAP
UNIT QUANTITY:	48 TOTAL UNITS

SITE SPECIFIC DESIGN CRITERIA

1. STORMTRAP UNITS SHALL BE MANUFACTURED AND INSTALLED ACCORDING TO SHOP DRAWINGS APPROVED BY THE INSTALLING CONTRACTOR AND ENGINEER OF RECORD. THE SHOP DRAWINGS SHALL INDICATE SIZE AND LOCATION OF ROOF OPENINGS AND INLET/ OUTLET PIPE TYPES, SIZES, INVERT ELEVATIONS AND SIZE OF OPENINGS.
2. COVER RANGE: MIN. 1.30' MAX. 2.00' CONSULT STORMTRAP FOR ADDITIONAL COVER OPTIONS.
3. ALL DIMENSIONS AND SOIL CONDITIONS, INCLUDING BUT NOT LIMITED TO GROUNDWATER AND SOIL BEARING CAPACITY ARE REQUIRED TO BE VERIFIED IN THE FIELD BY OTHERS PRIOR TO STORMTRAP INSTALLATION.
4. FOR STRUCTURAL CALCULATIONS THE GROUND WATER TABLE IS ASSUMED TO BE BELOW INVERT OF SYSTEM . IF WATER TABLE IS DIFFERENT THAN ASSUMED, CONTACT STORMTRAP.

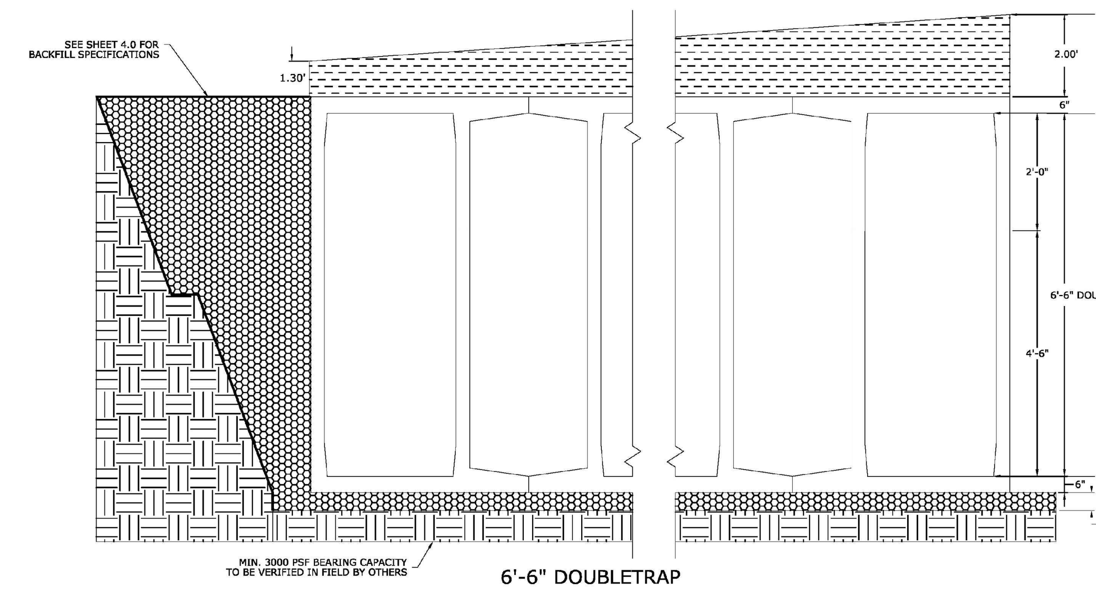

6'-6" DOUBLETRAP

StormTrap® 1287 WINDHAM PARKWAY ROMEOVILLE, IL 60446 P:815-941-4549 / F:331-318-5347
ENGINEER INFORMATION: RWG ENGINEERING 975 E. 22ND STREET SUITE 400 WHEATON, IL 60189 PHONE: 630-480-7889
PROJECT INFORMATION: SIGWALT APARTMENTS ARLINGTON HEIGHTS, IL
CURRENT ISSUE DATE: 12/15/2017 ISSUED FOR: PRELIMINARY
2 12/15/2017 PRELIMINARY DS; 1 7/5/2017 PRELIMINARY DS
SCALE: NTS

SHEET TITLE: DOUBLETRAP DESIGN CRITERIA

SHEET NUMBER: 1.0

BILL OF MATERIALS

QTY.	UNIT TYPE	DESCRIPTION	TOP WEIGHT	BASE WEIGHT
0	II/I	6'-6" DOUBLETRAP	13836	14986
0	II	6'-6" DOUBLETRAP	13836	17061
14	IV/III	6'-6" DOUBLETRAP	11704	14678
4	IV	6'-6" DOUBLETRAP	11704	15716
4	VII	6'-6" DOUBLETRAP	9573	14365
1	SPIV	6'-6" DOUBLETRAP	8000	10742
1	SPVII	6'-6" DOUBLETRAP	6544	9820
8	PANEL	8" THICK PANELS	VARIES	
6	JOINTWRAP	150' PER ROLL		
48	JOINTTAPE	14.5' PER ROLL		

DESIGN CRITERIA
ALLOWABLE MAX GRADE = 695.00
ALLOWABLE MIN GRADE = 694.30
INSIDE HEIGHT ELEVATION = 692.50
SYSTEM INVERT = 686.00
STORMTRAP VOLUME = 12,765.97 C.F.

NOTES:
1. DIMENSIONING OF STORMTRAP SYSTEM SHOWN BELOW ALLOW FOR A 3/4" GAP BETWEEN EACH MODULE.
2. ALL DIMENSIONS TO BE VERIFIED IN THE FIELD BY OTHERS.
3. SEE SHEET 3.0 FOR INSTALLATION SPECIFICATIONS.
4. SP - INDICATES A MODULE WITH MODIFICATIONS.
5. P - INDICATES A MODULE WITH A PANEL ATTACHMENT.
6. CONTRACTORS RESPONSIBILITY TO ENSURE CONSISTENCY/ACCURACY TO FINAL ENGINEER OF RECORD PLAN SET.

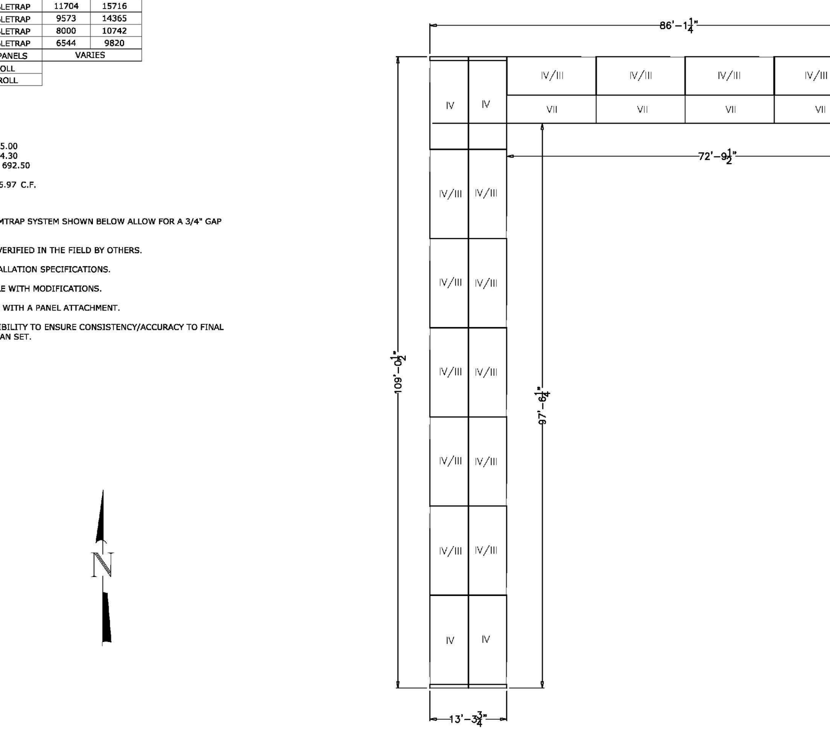

StormTrap® 1287 WINDHAM PARKWAY ROMEOVILLE, IL 60446 P:815-941-4549 / F:331-318-5347
ENGINEER INFORMATION: RWG ENGINEERING 975 E. 22ND STREET SUITE 400 WHEATON, IL 60189 PHONE: 630-480-7889
PROJECT INFORMATION: SIGWALT APARTMENTS ARLINGTON HEIGHTS, IL
CURRENT ISSUE DATE: 12/15/2017 ISSUED FOR: PRELIMINARY
2 12/15/2017 PRELIMINARY DS; 1 7/5/2017 PRELIMINARY DS
SCALE: NTS

SHEET TITLE: DOUBLETRAP SYSTEM LAYOUT

SHEET NUMBER: 2.0

STORMTRAP INSTALLATION SPECIFICATIONS

1. STORMTRAP SHALL BE INSTALLED IN ACCORDANCE WITH ASTM C891, STANDARD FOR INSTALLATION OF UNDERGROUND PRECAST CONCRETE UTILITY STRUCTURES, THE FOLLOWING ADDITIONS AND/OR EXCEPTIONS SHALL APPLY:
2. IT IS THE RESPONSIBILITY OF THE INSTALLING CONTRACTOR TO ENSURE THAT PROPER/ADEQUATE EQUIPMENT IS USED TO SET/INSTALL THE MODULES.
3. STORMTRAP MODULES CAN BE PLACED ON A LEVEL, 6" FOUNDATION OF ¾" AGGREGATE EXTENDING 2'-0" PAST THE OUTSIDE OF THE SYSTEM (SEE DETAIL 1) AND SHALL BE PLACED ON PROPERLY COMPACTED SOILS (SEE SHEET 1.0 FOR SOIL BEARING CAPACITY REQUIREMENTS), AND IN ACCORDANCE WITH ASTM C891 STANDARD PRACTICE FOR INSTALLATION OF UNDERGROUND PRECAST UTILITY STRUCTURES.
4. THE STORMTRAP MODULES SHALL BE PLACED SUCH THAT THE MAXIMUM SPACE BETWEEN ADJACENT MODULES DOES NOT EXCEED ¾" (SEE DETAIL 2). IF THE SPACE EXCEEDS ¾", THE MODULES SHALL BE RESET WITH APPROPRIATE ADJUSTMENT MADE TO LINE AND GRADE TO BRING THE SPACE INTO SPECIFICATION.
5. STORMTRAP MODULES ARE NOT WATERTIGHT. IF A WATERTIGHT SOLUTION IS REQUIRED, CONTACT STORMTRAP FOR RECOMMENDATIONS. THE WATERTIGHT APPLICATION IS TO BE PROVIDED AND IMPLEMENTED BY THE CONTRACTOR. THE CONTRACTOR IS RESPONSIBLE TO ENSURE THAT THE SELECTED WATERTIGHT SOLUTION PERFORMS AS SPECIFIED BY THE MANUFACTURER.
6. THE PERIMETER HORIZONTAL JOINT BETWEEN THE TOP AND BASE LEG CONNECTION OF THE STORMTRAP MODULES SHALL BE SEALED WITH PREFORMED MASTIC JOINT TAPE ACCORDING TO ASTM C891, 8.8 AND 8.12. (SEE DETAIL 3). THE MASTIC JOINT TAPE DOES NOT PROVIDE A WATERTIGHT SEAL. THE SOLE PURPOSE OF THE JOINT TAPE IS TO PROVIDE A SILT AND SOIL TIGHT SYSTEM.
7. ALL EXTERIOR JOINTS BETWEEN ADJACENT STORMTRAP MODULES SHALL BE SEALED WITH 8" WIDE PRE-FORMED, COLD-APPLIED, SELF-ADHERING ELASTOMERIC RESIN, BONDED TO A WOVEN , HIGHLY PUNCTURE RESISTANT POLYMER WRAP, CONFORMING TO ASTM C891 AND SHALL BE INTEGRATED WITH PRIMER SEALANT AS APPROVED BY STORMTRAP (SEE DETAILS 3 & 4). THE JOINT WRAP DOES NOT PROVIDE A WATERTIGHT SEAL. THE SOLE PURPOSE OF THE JOINT WRAP IS TO PROVIDE A SILT AND SOIL TIGHT SYSTEM. THE ADHESIVE EXTERIOR JOINT WRAP SHALL BE INSTALLED ACCORDING TO THE FOLLOWING INSTALLATION INSTRUCTIONS:
   - 7.1. USE A BRUSH OR WET CLOTH TO THOROUGHLY CLEAN THE OUTSIDE SURFACE AT THE POINT WHERE JOINT WRAP IS TO BE APPLIED.
   - 7.2. A RELEASE PAPER PROTECTS THE ADHESIVE SIDE OF THE JOINT WRAP. PLACE THE ADHESIVE TAPE (ADHESIVE SIDE DOWN) AROUND THE STRUCTURE, REMOVING THE RELEASE PAPER AS YOU GO. PRESS THE JOINT WRAP FIRMLY AGAINST THE STORMTRAP MODULE SURFACE WHEN APPLYING.
8. IF THE CONTRACTOR NEEDS TO CANCEL ANY SHIPMENTS, THEY MUST DO SO 48 HOURS PRIOR TO THEIR SCHEDULED ARRIVAL AT THE JOB SITE. IF CANCELED AFTER THAT TIME, PLEASE CONTACT THE PROJECT MANAGER.
9. IF THE STORMTRAP MODULE(S) IS DAMAGED IN ANY WAY PRIOR, DURING, OR AFTER INSTALL, STORMTRAP MUST BE CONTACTED IMMEDIATELY TO ASSESS THE DAMAGE AND TO DETERMINE WHETHER OR NOT THE MODULE(S) WILL NEED TO BE REPLACED. IF ANY MODULE ARRIVES AT THE JOBSITE DAMAGED DO NOT UNLOAD IT; CONTACT STORMTRAP IMMEDIATELY. ANY DAMAGE NOT REPORTED BEFORE THE TRUCK IS UNLOADED WILL BE THE CONTRACTOR'S RESPONSIBILITY.
10. STORMTRAP MODULES CANNOT BE ALTERED IN ANY WAY AFTER MANUFACTURING WITHOUT WRITTEN CONSENT FROM STORMTRAP.

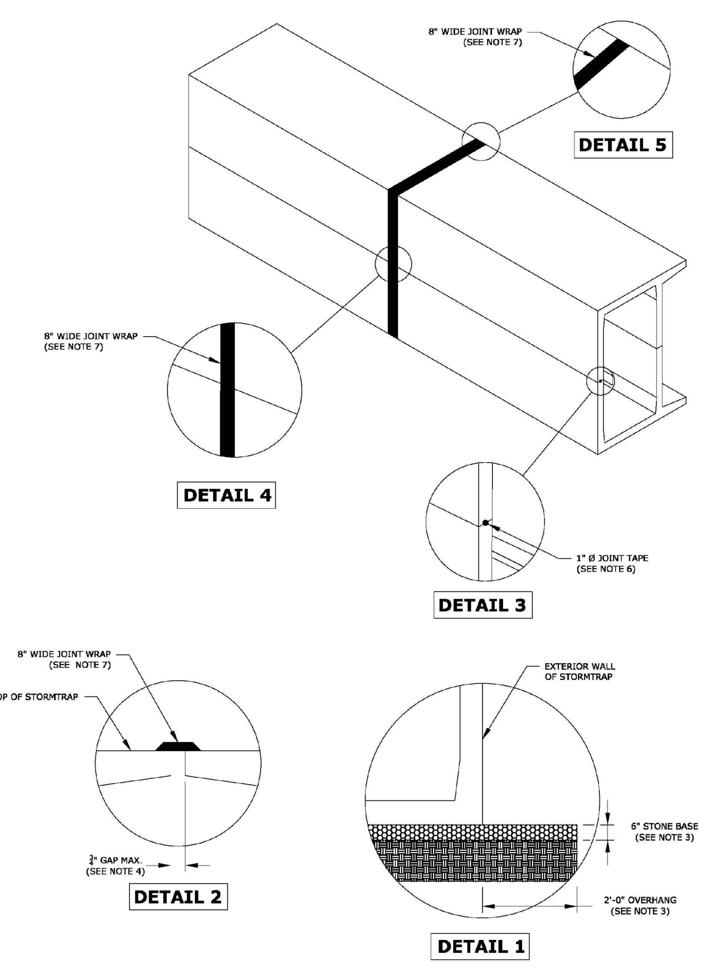

StormTrap® 1287 WINDHAM PARKWAY ROMEOVILLE, IL 60446 P:815-941-4549 / F:331-318-5347
ENGINEER INFORMATION: RWG ENGINEERING 975 E. 22ND STREET SUITE 400 WHEATON, IL 60189 PHONE: 630-480-7889
PROJECT INFORMATION: SIGWALT APARTMENTS ARLINGTON HEIGHTS, IL
CURRENT ISSUE DATE: 12/15/2017 ISSUED FOR: PRELIMINARY
2 12/15/2017 PRELIMINARY DS; 1 7/5/2017 PRELIMINARY DS
SCALE: NTS

SHEET TITLE: DOUBLETRAP INSTALLATION SPECIFICATIONS

SHEET NUMBER: 3.0

END PANEL ERECTION/INSTALLATION NOTES

1. END PANELS WILL BE SUPPLIED TO CLOSE OFF OPEN ENDS OF ROWS.
2. PANELS SHALL BE INSTALLED IN A TILT UP FASHION DIRECTLY ADJACENT TO OPEN END OF MODULE (REFER TO SHEET 2.0 FOR END PANEL LOCATIONS).
3. CONNECTION HOOKS WILL BE SUPPLIED WITH END PANELS TO SECURELY CONNECT PANEL TO ADJACENT STORMTRAP MODULE (SEE PANEL CONNECTION ELEVATION VIEW).
4. ONCE CONNECTION HOOK IS ATTACHED, LIFTING CLUTCHES MAY BE REMOVED.
5. JOINT WRAP SHALL BE PLACED AROUND PERIMETER JOINT PANEL (SEE SHEET 3.0).

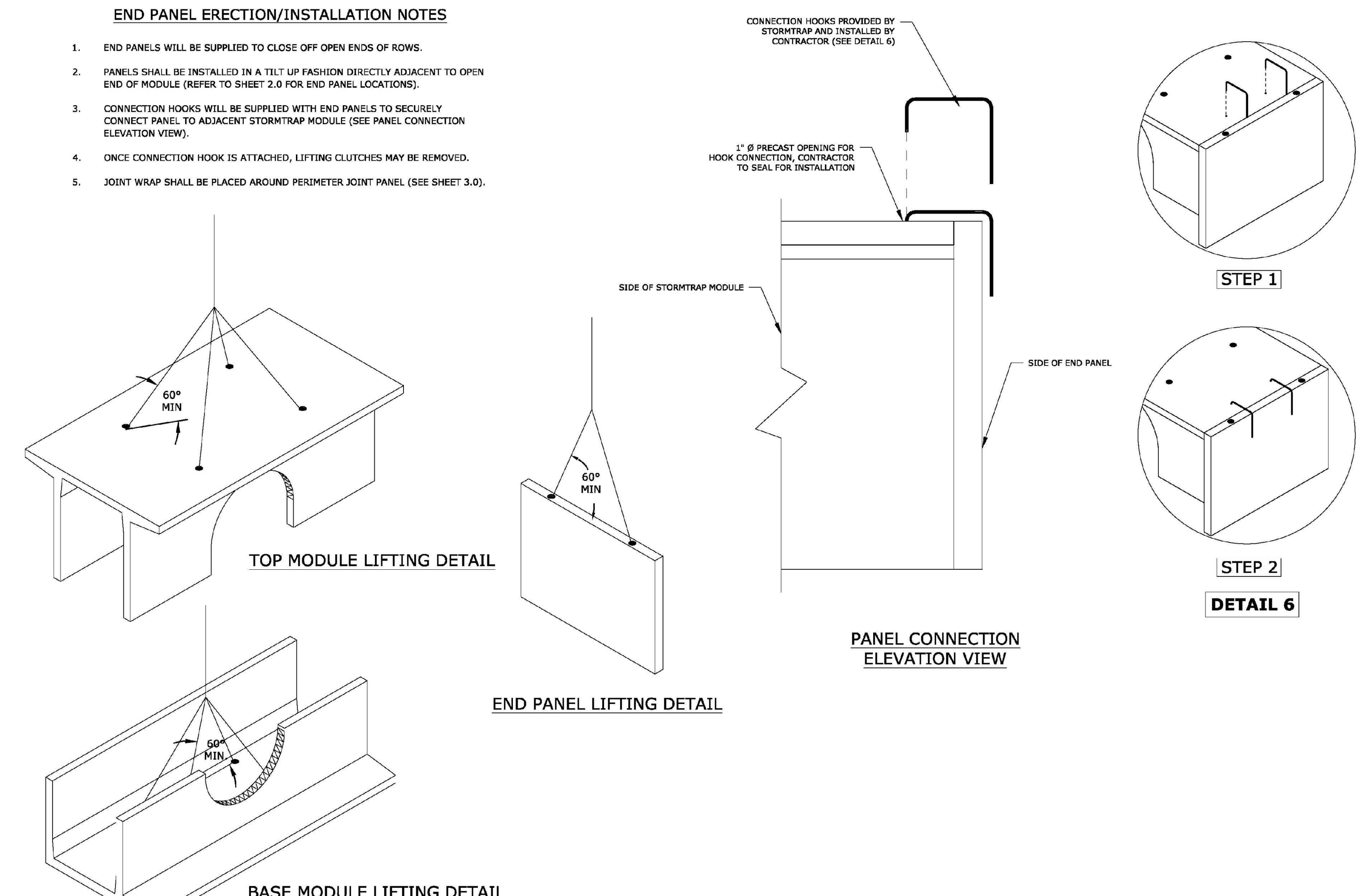

StormTrap® 1287 WINDHAM PARKWAY ROMEOVILLE, IL 60446 P:815-941-4549 / F:331-318-5347
ENGINEER INFORMATION: RWG ENGINEERING 975 E. 22ND STREET SUITE 400 WHEATON, IL 60189 PHONE: 630-480-7889
PROJECT INFORMATION: SIGWALT APARTMENTS ARLINGTON HEIGHTS, IL
CURRENT ISSUE DATE: 12/15/2017 ISSUED FOR: PRELIMINARY
2 12/15/2017 PRELIMINARY DS; 1 7/5/2017 PRELIMINARY DS
SCALE: NTS
SHEET TITLE: DOUBLETRAP INSTALLATION SPECIFICATIONS

SHEET NUMBER: 3.1

ZONE CHART

ZONES	ZONE DESCRIPTIONS	REMARKS
ZONE 1	FOUNDATION AGGREGATE	#5 (¾") AGGREGATE (SEE NOTE 4 FOR DESCRIPTION)
ZONE 2	BACKFILL	#5 (¾") AGGREGATE (SEE NOTE 4 FOR DESCRIPTION)
ZONE 3	FINAL COVER OVERTOP	MATERIALS NOT TO EXCEED 120 PCF

FILL DEPTH	TRACK WIDTH	MAX GROUND PRESSURE
12"	12"	1690 psf
	18"	1219 psf
	24"	1111 psf
	30"	1000 psf
	36"	924 psf

STORMTRAP ZONE INSTALLATION SPECIFICATIONS/PROCEDURES

1. THE FILL PLACED AROUND THE STORMTRAP MODULES MUST DEPOSITED ON BOTH SIDES AT THE SAME TIME AND TO APPROXIMATELY THE SAME ELEVATION. AT NO TIME SHALL THE FILL BEHIND ONE SIDE WALL BE MORE THAN 2'-0" HIGHER THAN THE FILL ON THE OPPOSITE SIDE. BACKFILL SHALL EITHER BE COMPACTED AND/OR VIBRATED TO ENSURE THAT BACKFILL AGGREGATE/STONE MATERIAL IS WELL SEATED AND PROPERLY INTER LOCKED. CARE SHALL BE TAKEN TO PREVENT ANY WEDGING ACTION AGAINST THE STRUCTURE, AND ALL SLOPES WITHIN THE AREA TO BE BACKFILLED MUST BE STEPPED OR SERRATED TO PREVENT WEDGING ACTION. CARE SHALL ALSO BE TAKEN AS NOT TO DISRUPT THE JOINT WRAP FROM THE JOINT DURING THE BACKFILL PROCESS. BACKFILL MATERIAL SHALL BE CLEAN, CRUSHED, ANGULAR No. 5 (AASHTO M43) AGGREGATE. IF NATIVE EARTH IS SUSCEPTIBLE TO MIGRATION, CONFIRM WITH GEOTECHNICAL ENGINEER AND PROVIDE PROTECTION AS REQUIRED (PROVIDED BY OTHERS).
2. DURING PLACEMENT OF MATERIAL OVERTOP THE SYSTEM, AT NO TIME SHALL MACHINERY BE USED OVERTOP THAT EXCEEDS THE DESIGN LIMITATIONS OF THE SYSTEM. WHEN PLACEMENT OF MATERIAL OVERTOP, MATERIAL SHALL BE PLACED SUCH THAT THE DIRECTION OF PLACEMENT IS PARALLEL WITH THE OVERALL LONGITUDINAL DIRECTION OF THE SYSTEM WHENEVER POSSIBLE.
3. THE FILL PLACED OVERTOP THE SYSTEM SHALL BE PLACED AT A MINIMUM OF 6" LIFTS. AT NO TIME SHALL MACHINERY OR VEHICLES GREATER THAN THE DESIGN HS-20 LOADING CRITERIA TRAVEL OVERTOP THE SYSTEM WITHOUT THE MINIMUM DESIGN COVERAGE. IF TRAVEL IS NECESSARY OVERTOP THE SYSTEM PRIOR TO ACHIEVING THE MINIMUM DESIGN COVER, IT MAY BE NECESSARY TO REDUCE THE ULTIMATE LOAD/BURDEN OF THE OPERATING MACHINERY SO AS TO NOT EXCEED THE DESIGN CAPACITY OF THE SYSTEM. IN SOME CASES, IN ORDER TO ACHIEVE REQUIRED COMPACTION, HAND COMPACTION MAY BE NECESSARY IN ORDER NOT TO EXCEED THE ALLOTTED DESIGN LOADING. SEE CHART FOR TRACKED VEHICLE WIDTH AND ALLOWABLE MAXIMUM PRESSURE PER TRACK.
4. FREE DRAINING AGGREGATE - 80% AGGREGATE RETAINED ON ½" SIEVE MAJORITY OF AGGREGATE SIZE BETWEEN ½" AND 1" ONLY 5% OF MATERIAL PASSING #200 SIEVE NO FINES.

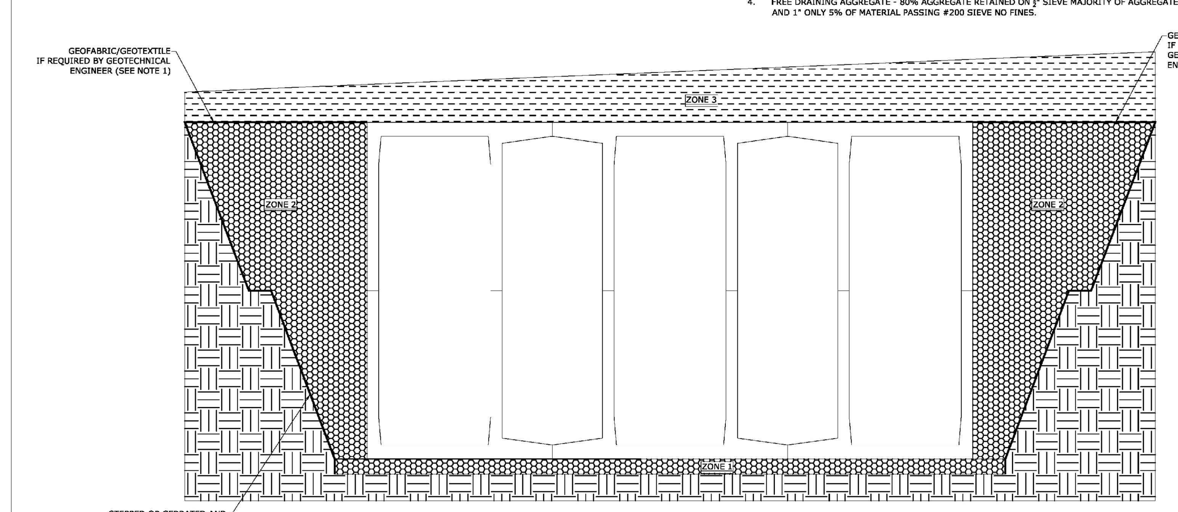

BACKFILL DETAIL

StormTrap® 1287 WINDHAM PARKWAY ROMEOVILLE, IL 60446 P:815-941-4549 / F:331-318-5347
ENGINEER INFORMATION: RWG ENGINEERING 975 E. 22ND STREET SUITE 400 WHEATON, IL 60189 PHONE: 630-480-7889
PROJECT INFORMATION: SIGWALT APARTMENTS ARLINGTON HEIGHTS, IL
CURRENT ISSUE DATE: 12/15/2017 ISSUED FOR: PRELIMINARY
2 12/15/2017 PRELIMINARY DS; 1 7/5/2017 PRELIMINARY DS
SCALE: NTS

SHEET TITLE: DOUBLETRAP BACKFILL SPECIFICATIONS

SHEET NUMBER: 4.0

RECOMMENDED ACCESS OPENING SPECIFICATION

1. A TYPICAL ACCESS OPENING FOR THE STORMTRAP SYSTEM ARE 2'-0" IN DIAMETER. ACCESS OPENINGS LARGER THAN 3'-0" IN DIAMETER NEED TO BE APPROVED BY STORMTRAP. ALL OPENINGS MUST RETAIN AT LEAST 1'-0" OF CLEARANCE FROM THE END OF THE STORMTRAP MODULE UNLESS NOTED OTHERWISE. ALL ACCESS OPENINGS TO BE LOCATED ON INSIDE LEG UNLESS OTHERWISE SPECIFIED.
2. PLASTIC COATED STEEL STEPS PRODUCED BY M.A. INDUSTRIES PART #PS3-PFC OR APPROVED EQUAL (SEE STEP DETAIL) ARE PROVIDED INSIDE ANY MODULE WHERE DEEMED NECESSARY. THE HIGHEST STEP IN THE MODULE IS TO BE PLACED A DISTANCE OF 1'-0" FROM THE INSIDE EDGE OF THE STORMTRAP MODULES. ALL ENSUING STEPS SHALL BE PLACED WITH A MAXIMUM DISTANCE OF 1'-4" BETWEEN THEM. STEPS MAY BE MOVED OR ALTERED TO AVOID OPENINGS OR OTHER IRREGULARITIES IN THE MODULE.
3. STORMTRAP LIFTING INSERTS MAY BE RELOCATED TO AVOID INTERFERENCE WITH ACCESS OPENINGS OR THE CENTER OF GRAVITY OF THE MODULE AS NEEDED.
4. STORMTRAP ACCESS OPENINGS MAY BE RELOCATED TO AVOID INTERFERENCE WITH INLET AND/OR OUTLET PIPE OPENINGS SO PLACEMENT OF STEPS IS ATTAINABLE.
5. ACCESS OPENINGS SHOULD BE LOCATED IN ORDER TO MEET THE APPROPRIATE MUNICIPAL REQUIREMENTS. STORMTRAP RECOMMENDS AT LEAST TWO ACCESS OPENINGS PER SYSTEM FOR ACCESS AND INSPECTION.
6. USE PRECAST ADJUSTING RINGS AS NEEDED TO MEET GRADE. STORMTRAP RECOMMENDS FOR COVER OVER 2' TO USE PRECAST BARREL OR CONE INSPECTIONS. (PROVIDED BY OTHERS)

RECOMMENDED PIPE OPENING SPECIFICATION

1. MINIMUM EDGE DISTANCE FOR AN OPENING ON THE OUTSIDE WALL SHALL BE NO LESS THAN 1'-0".
2. MAXIMUM OPENING SIZE TO BE DETERMINED BY THE MODULE HEIGHT. PREFERRED OPENING SIZE Ø 36" OR LESS. ANY OPENING NEEDED THAT DOES NOT FIT THIS CRITERIA SHALL BE BROUGHT TO THE ATTENTION OF STORMTRAP FOR REVIEW.
3. CONNECTING PIPES SHALL BE INSTALLED WITH A 1'-0" CONCRETE COLLAR, AND AN AGGREGATE CRADLE FOR AT LEAST ONE PIPE LENGTH (SEE PIPE CONNECTION DETAIL). A STRUCTURAL GRADE CONCRETE OR HIGH STRENGTH, NON-SHRINK GROUT WITH A MINIMUM 28 DAY COMPRESSIVE STRENGTH OF 3000 PSI SHALL BE USED.
4. THE ANNULAR SPACE BETWEEN THE PIPE AND THE HOLE SHALL BE FILLED WITH HIGH STRENGTH NON-SHRINK GROUT.

RECOMMENDED PIPE INSTALLATION INSTRUCTIONS

1. CLEAN AND LIGHTLY LUBRICATE ALL OF THE PIPE TO BE INSERTED INTO STORMTRAP.
2. IF PIPE IS CUT, CARE SHOULD BE TAKEN TO ALLOW NO SHARP EDGES. BEVEL AND LUBRICATE LEAD END OF PIPE.
3. ALIGN CENTER OF PIPE TO CORRECT ELEVATION AND INSERT INTO OPENING.

NOTE: ALL ANCILLARY PRODUCTS/SPECIFICATIONS RECOMMENDED AND SHOWN ON THIS SHEET ARE RECOMMENDATIONS ONLY AND SUBJECT TO CHANGE PER THE INSTALLING CONTRACTOR AND/OR PER LOCAL MUNICIPAL CODE/REQUIREMENTS.

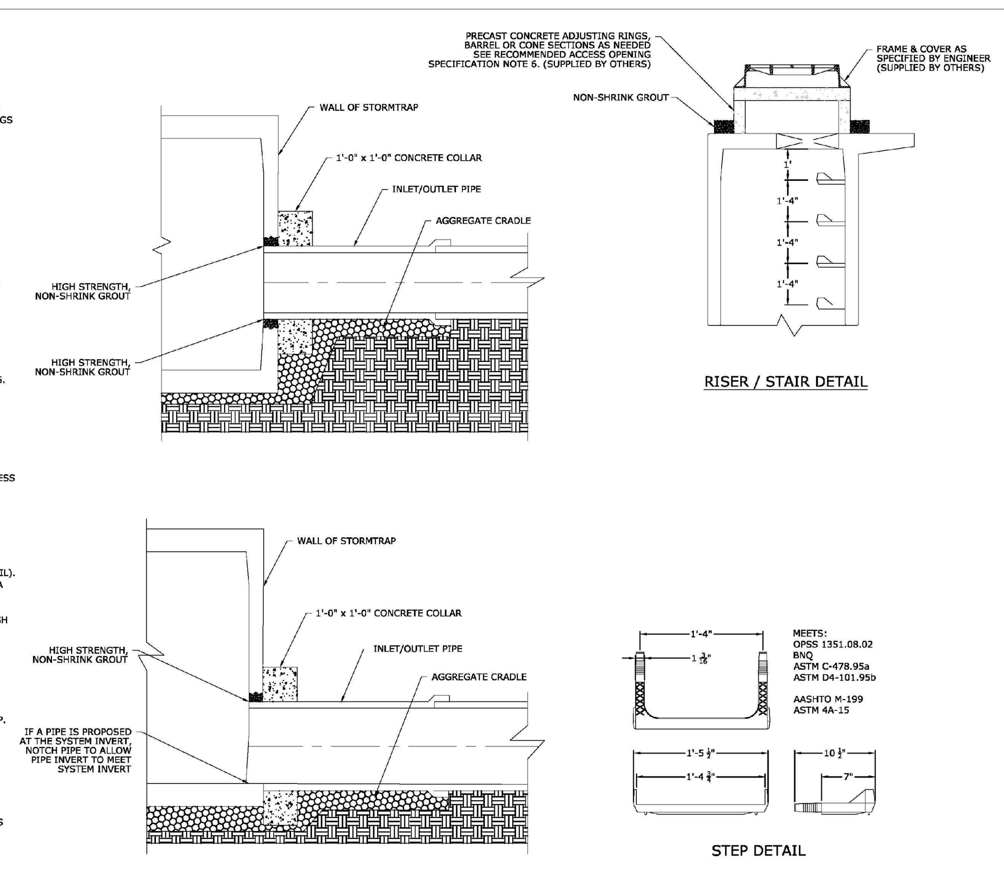

StormTrap® 1287 WINDHAM PARKWAY ROMEOVILLE, IL 60446 P:815-941-4549 / F:331-318-5347
ENGINEER INFORMATION: RWG ENGINEERING 975 E. 22ND STREET SUITE 400 WHEATON, IL 60189 PHONE: 630-480-7889
PROJECT INFORMATION: SIGWALT APARTMENTS ARLINGTON HEIGHTS, IL
CURRENT ISSUE DATE: 12/15/2017 ISSUED FOR: PRELIMINARY
2 12/15/2017 PRELIMINARY DS; 1 7/5/2017 PRELIMINARY DS
SCALE: NTS

SHEET TITLE: RECOMMENDED PIPE / ACCESS OPENING SPECIFICATIONS

SHEET NUMBER: 5.0

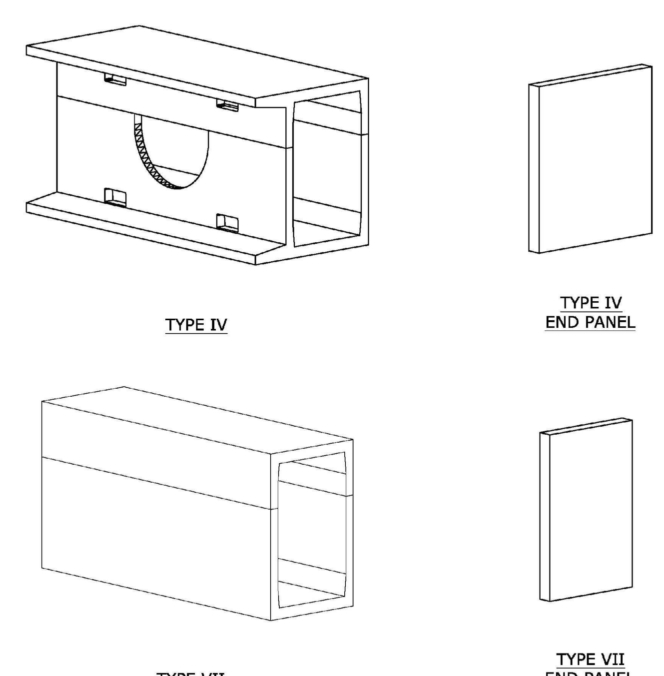

NOTES:
1. OPENING LOCATIONS AND SHAPES MAY VARY.
2. SP - INDICATES A MODULE WITH MODIFICATIONS.
3. P - INDICATES A MODULE WITH A PANEL ATTACHMENT.
4. POCKET WINDOW OPENINGS ARE OPTIONAL.

StormTrap® 1287 WINDHAM PARKWAY ROMEOVILLE, IL 60446 P:815-941-4549 / F:331-318-5347
ENGINEER INFORMATION: RWG ENGINEERING 975 E. 22ND STREET SUITE 400 WHEATON, IL 60189 PHONE: 630-480-7889
PROJECT INFORMATION: SIGWALT APARTMENTS ARLINGTON HEIGHTS, IL
CURRENT ISSUE DATE: 12/15/2017 ISSUED FOR: PRELIMINARY
2 12/15/2017 PRELIMINARY DS; 1 7/5/2017 PRELIMINARY DS
SCALE: NTS

SHEET TITLE: DOUBLETRAP MODULE TYPES

SHEET NUMBER: 6.0

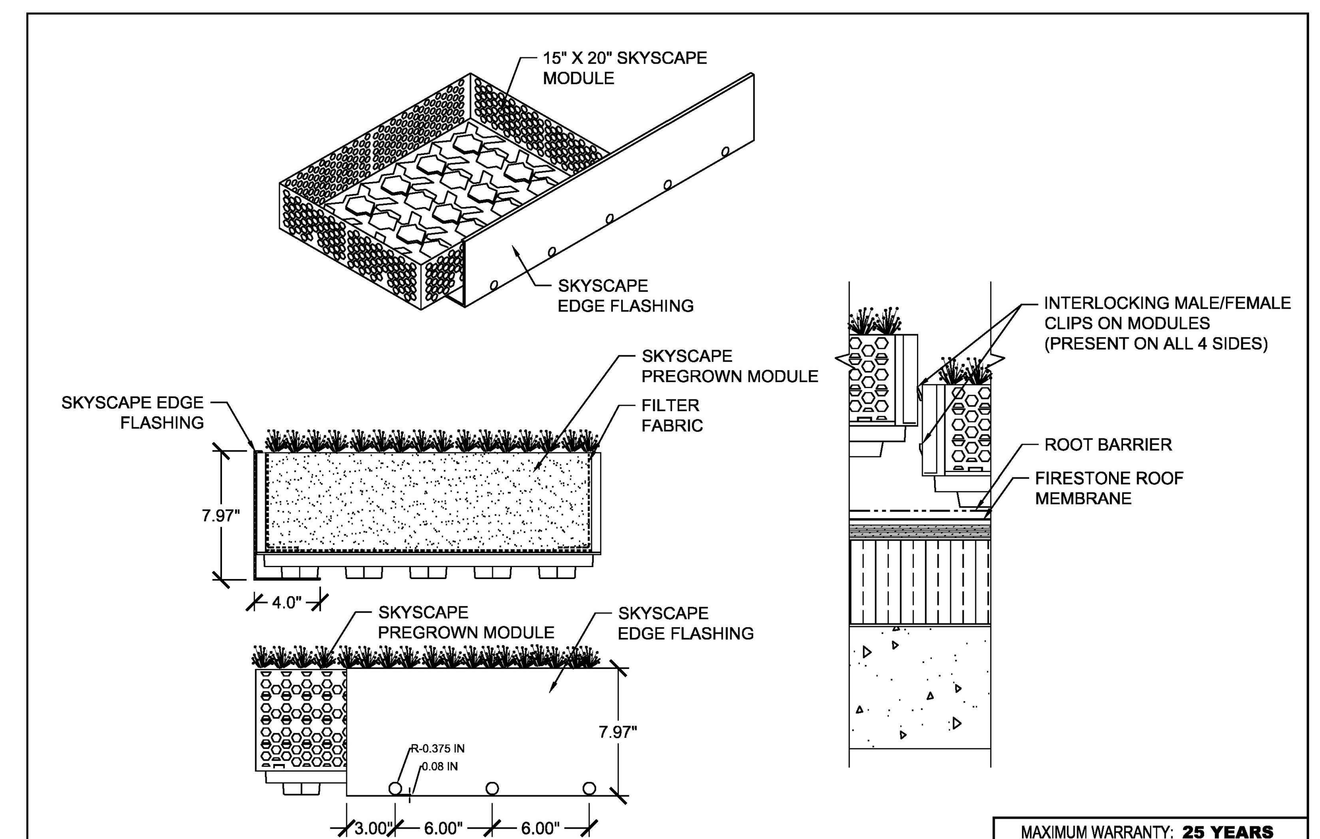

		MAXIMUM WARRANTY: **25 YEARS**	
Firestone BUILDING PRODUCTS NOBODY COVERS YOU BETTER.™ www.firestonebpco.com	**SKYSCAPE 6" PREGROWN MODULE (15" x 20")**	ISSUE / REVISION DATE: 11/30/2015	DETAIL NO. SS-6C
	SKYSCAPE™ VEGETATIVE ROOF SYSTEM / ACCEPTABLE SYSTEMS: ENVIRO READY EPDM / TPO / MOD BIT	NOT TO SCALE	

*APPROVED ALTERNATIVE MAY BE USED.

DATE	REVISIONS	DRAWN BY
1. 08/16/17	VILLAGE REVISIONS	ZRN
2. 09/06/17	VILLAGE REVISIONS	TLM
3. 12/15/17	VILLAGE/CLIENT REVISIONS	TLM
4. 01/26/18	VILLAGE REVISIONS	TLM
5. 02/13/18	CLIENT REVISIONS	AVS

© COPYRIGHT 2017

SIGWALT STREET APARTMENTS
ARLINGTON HEIGHTS, ILLINOIS
CONSTRUCTION DETAILS AND STANDARDS

975 E. 22nd St, Suite 400
Wheaton, IL 60189
630.480.7889
www.rwg-engineering.com

RWG Engineering, LLC
Civil Engineering ◆ Real Estate Consulting ◆ Project Management

PROJECT NO. 29112716
DATE 07/10/17
SCALE NONE
PROJ. MGR. RWG
PROJ. ASSOC. MRM
DRAWN BY ZRN